STAINLESS STEEL THREADED PN 16 BALL CHECK VALVE

CBL 6149

Ref. : CBL 6149.pas

Rev. : Initial

Date : 07/01/2015

PA Ventiler AB

GO WITH OUR FLOW

APPLICATION

Usage général : waste water, viscous and dense fluids.

GENERAL CHARACTERISTICS

Ball type.
Vertical position with ascendant fluid or horizontal position (respect the flow direction indicated by the arrow).
Female / female threaded.
Bolted bonnet for easy maintenance.
Stainless steel 316 body.
FPM gasket.
Check valve tested individually at 3 bars of compressed air.

CONSTRUCTION

Pos.	Description	Material
7	Bolting	Stainless steel ASTM A 182 F316
6	Nipple	Stainless steel ASTM A 182 F316
5	Collar	Stainless steel ASTM A 182 F316
4	Ball	Aluminium revêtu FPM
3	Bonnet gasket	FPM
2	Bonnet	Stainless steel ASTM A 182 F316
1	Body	Stainless steel ASTM A 182 F316

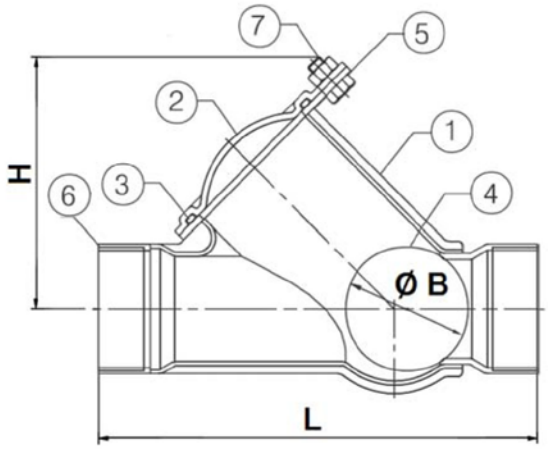

DIMENSIONS

DN mm	DN inch	L	H	ØB	Weight (kg)
32	1"1/4	175	99	50	1,100
40	1"1/2	190	99	50	1,180
50	2"	210	112	60	1,610

INSTALLATION POSITIONS

Vertical position (Ascendant fluid)

Horizontal position

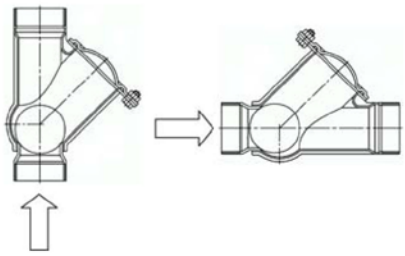

WORKING CONDITIONS

Maximum working pressure : 16 bar.
Maximum working temperature : 0°C / + 150°C.

STANDARDS

DIRECTIVE 2014/68/UE : Products excluded from directive (Article 1, § 3.2)
Cylindrical female BSP threaded according to ISO 228-1

HEAD LOSS GRAPH

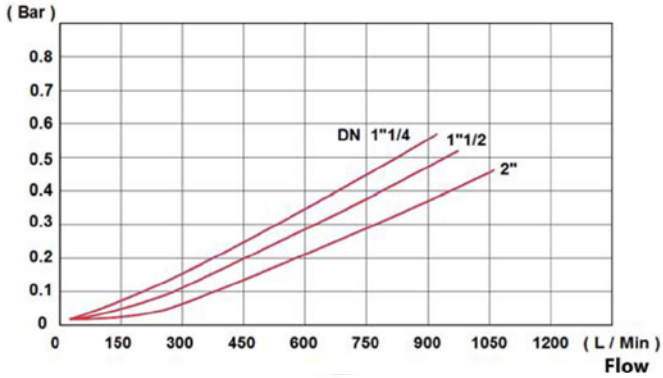

The photographies and technical art works are not contractual. The specifications of the presented products are open to modifications without previous advice.