ACTREG

The art of power and perfection



PNEUMATIC ACTUATORS
RACK AND PINION

PA Ventiler AB
EN DEL AV BEIJERTECH



ACTREG

The art of power and perfection

ACTREG, established in 1992, is a multinational company specializing in the manufacture and sales of high quality actuators for valves requiring a rotary quarter turn movement for either On/Off or modulating duty. The expertise and know how has made ACTREG leader in actuation technology.



ACTREG provides world coverage thanks to the strategic locations of its factories and offices. The international distribution ensures quick availability and more important, personalized service for valve manufacturers, valve stocking distributors and contractors.

ESTABLISHED IN
1992

INTERNATIONAL
Distribution

DESIGN &
Quality

PERSONALIZED
Service

ACTREG

The art of power and perfection

RACK AND PINION
Aluminium housing

TORQUES UP TO
6.500 Nm

ACTUATORS IN
14 different sizes

We are a manufacturer of rack and pinion aluminium housing actuators with torque figures up to 6,500 Nm and scotch yoke actuators for heavy duty service up to 700.000 Nm. Our products offer reliable and dependable automation for ¼ turn valves.

Engineered and built to withstand most of the applications and environmental conditions, the precision in design and quality provides a long and safe operational performance in valve control.

ACTREG has invested in quality assurance, state-of-the-art machining and testing facilities in order to assist customers in safely controlling their processes.

ACTREG engineers are happy to help you with your automation requirements.



The art of power and

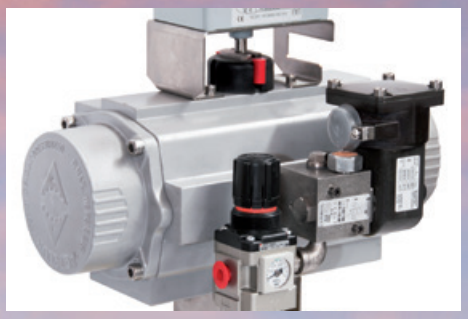

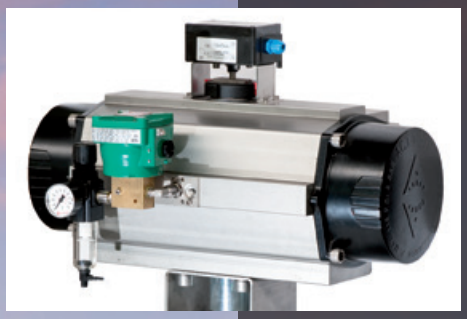



SCOTCH YOKE
Heavy duty service

TORQUES UP TO
700.000 Nm

ACTUATORS IN
29 different sizes

Certificates

ACTREG, S.A. has a Quality Management System certified in accordance with the requirements of ISO 9001:2008 for the design, development, manufacturing and distribution of pneumatic actuators and accessories for valves. Certified by BVQI No. ESPMDD005463.

ADA/ASR 10 up to ADA/ASR 300 are classified as category SEP in accordance with the requirements of Pressure Equipment Directive 97/23/EC. ADA/ASR 500 up to ADA/ASR 4000 are classified as Category I, Procedure module A.

All ACTREG pneumatic actuators are classified for use in potentially explosive atmospheres as Group II Category 2, suitable for zones 1, 2, 21 and 22 in accordance with Annex VIII of Directive 94/9/CE (ATEX). Technical file is deposited to LCIE, No. LCIE 05 AR 022.

ACTREG pneumatic actuators have SIL 3 (Safety Integrity level 3) certificate. The ACTREG actuators meets manufacturer design process requirements of Safety Integrity Level (SIL) 3. This is intended to achieve sufficient integrity against systematic errors of design by the manufacturer.











perfection

MAIN FEATURES & CHARACTERISTICS

1 **BODY**
The body is hard anodized aluminum with low surface roughness making it extremely abrasion resistant. Every single actuator is tested and provided with a unique serial number for traceability. This heat number is stamped on the body.

2 **PINION**
The carbon steel shaft is electroless nickel plated that protects against external and internal corrosion and is an anti-blowout design.

3 **ADJUSTMENT STROKE**
External stroke adjustment for 5 degree is placed on opposite side of Namur connection for better manipulation when the solenoid valve is assembled.

4 **PISTONS**
Pistons are coated with a special treatment for corrosion resistance. Backlash is avoided by a special tooth machining. The pistons have a 3-way guide for low friction between body and pistons. The pistons are also provided with an integral guide machined between pistons and pinion.

5 **POSITION INDICATOR**
Multi-function indicator suitable for mechanical or inductive switches is a standard feature. There are many different combinations so no need for external indicators.

6 **SPRINGS**
This system allows an easy fit for the necessary torque to open or close the valve which offers safe replacement and manipulation.

7 **END CAPS**
The are different end caps for double acting and spring return for quick and safe identification without need to read label. End caps are epoxy coated as a standard protecting them against environmental corrosion.

8 **CONNECTION VDI/VDE 3845**
The assembly of switch boxes, proximity switches or positioners take place by means of the Namur connection VDI/VDE 3845, which is a standard feature in all of our models. The height of the axis for all our products is 30mm, which means with a single model box or positioner all manufacturing ranges can be covered.

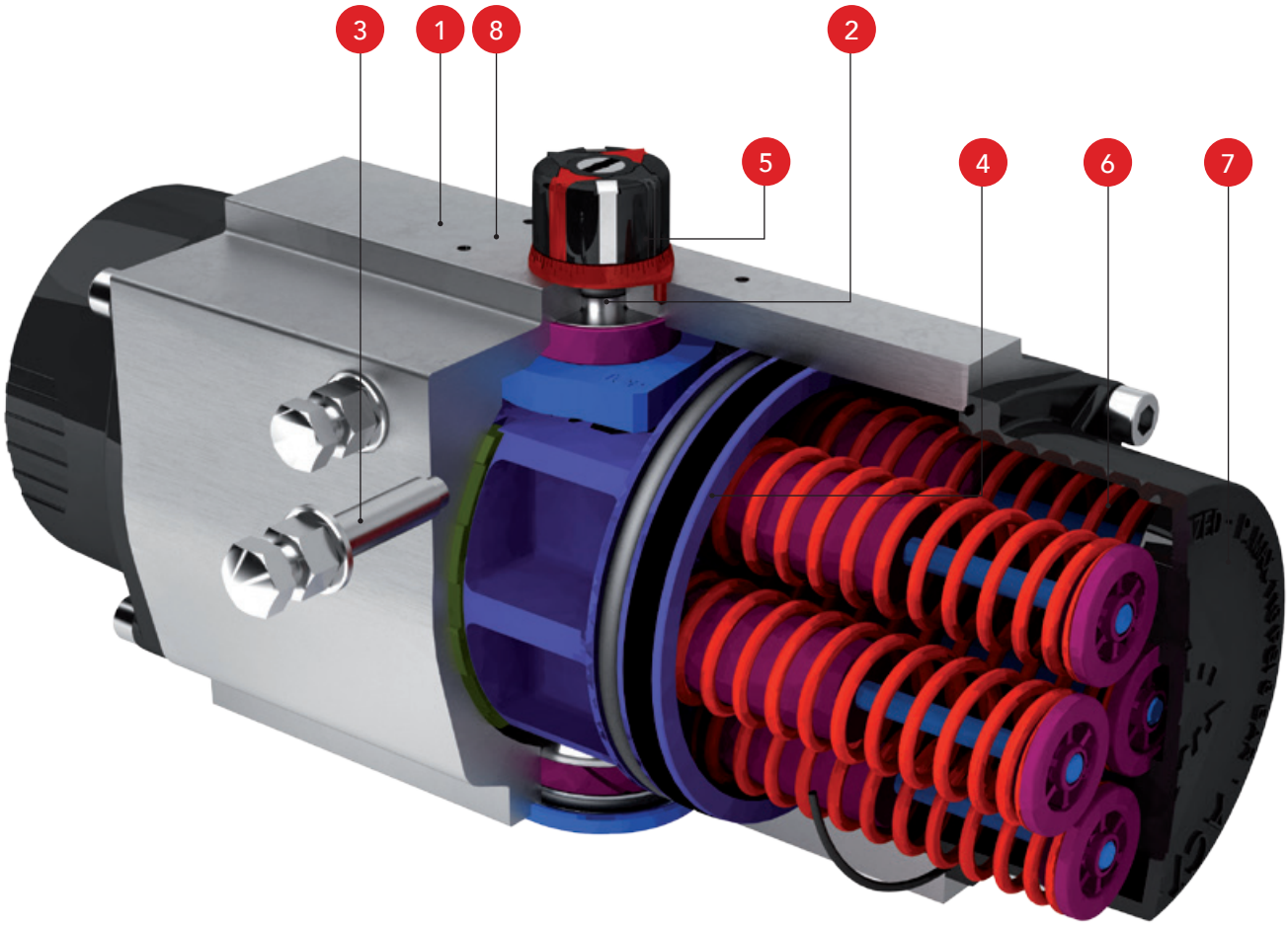

Types of Actuators
Double Acting & Spring Return



ADA
DOUBLE
ACTING
ACTUATOR



ASR
SPRING
RETURN
ACTUATOR

Rack and pinion design | Linear torque | Rotation angle 90° ± 5° | Antifriction sliding bearings | Long life without maintenance | Total safety for springs replacement | Mounting of solenoid valves acc. NAMUR Std. | Mounting of devices acc. NAMUR VDI/VDE 3845 Std. | Coupling according to ISO 5211 and DIN 3337 (Octogonal drive) | Multi-function position indicator suitable for mechanical and inductive direct switches.

Working temperature:
-30 °C to 100 °C in Standard Construction.
-15 °C to 150 °C with FKM O-rings (high temperature execution).
-40 °C to 80 °C with Silicone O-rings (low temperature execution).
-60° C to 80° C with Silicone O-rings and 316 pinion (extreme low temperature).

Maximum working pressure:
8 bar (116 psig). (Except ADA10 at 10 barg)

Bi-Directional Travel Stops

ACTREG pneumatic actuators are provided with bi-directional pinion travel stops.

Side located stops allow a full ± 5° travel adjustment between 85° and 95°. These travel stops are designed to absorb the maximum rated torque of the actuator and the maximum impact loads associated with recommended travel speed.

Adjustment of the travel limits are accomplished by unscrewing the locking nuts, turning the respective left and right stop studs to reduce or increase the travel angle and screwing the locking nuts.

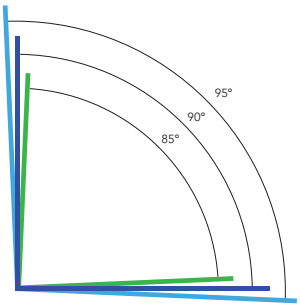

Options On Request

- Locking device with padlock.
- Fast acting actuators.
- 100% travel adjustment stroke.
- Fire proof systems (K-mass, blanket).

Coatings for special applications

Actreg Pneumatic actuators are protected against external corrosion by proper material selection or surface treatment.

Standard execution
Anticorrosive C3 according to EN-ISO 12944-2

PARTS	DESCRIPTION	COATING
BODY	Hard anodized	25-30 µm
END CAPS	Epoxy painted	80-90 µm
STEM	Carbon Steel + ENP	25-30 µm
SCREWS	A2	

Execution A
Anticorrosive C5-I/C5-M according to EN-ISO 12944-2

PARTS	DESCRIPTION	COATING
BODY	Epoxy painted	200-300 µm
END CAPS	Epoxy painted	140-180 µm
STEM	SS 316	
SCREWS	A4	

Execution B
Anticorrosive C4 according EN-ISO 12944-2

PARTS	DESCRIPTION	COATING
BODY	Epoxy painted	80-90 µm
END CAPS	Epoxy painted	80-90 µm
STEMS	Carbon Steel + ENP	
SCREWS	A2	

Multi-function position indicator

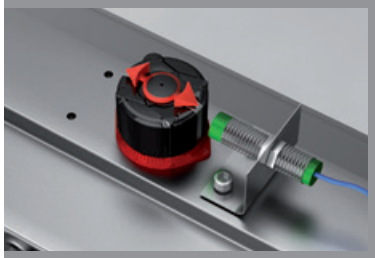
Inductive switch indicating open or closed position

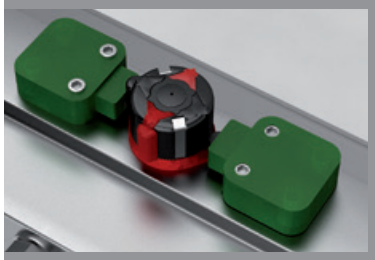
Mechanical switches indicating open and close

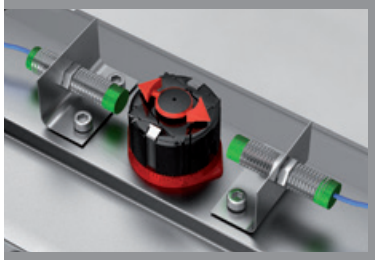
Inductive switches indicating open and closed position

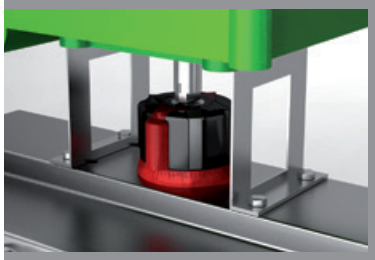
Namur connection for direct mounting switch box

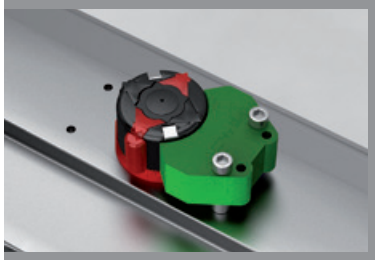
Inductive switches indicating open and closed position (45° detecting switches…)

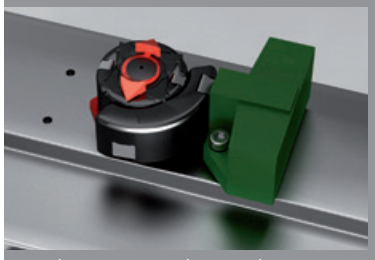
Inductive switches indicating open and closed position (up/down detecting switches…)

PARTS & MATERIALS

1 Body
Aluminium Hard Anodized

2 Piston
Aluminium

3 Pinion
Nickel Plated Carbon Steel

4 End Caps
Aluminium Epoxy Coated

5 Soft Pinion Washer *
Polyamide PA 6,6

6 Slide Piston *
Polyamide PA 6,6 + 30% G.F.

7 Lug **
Nickel Plated Carbon Steel

8 Pinion Washer
Stainless Steel

10 Upper Pinion Bearing
Polyamide PA 6,6 (bronze for sizes 500 and 2100)

12 Stop
ASTM A 105

14 Spring's Long Support
Polyamide PA 6,6

15 Spring's Short Support
Polyamide PA 6,6

16 Leveling Screw
Stainless Steel

18 Bolt
Stainless Steel

19 Spring
DIN 2076 · D-5.6

20 Position Indicator
Polypropylene

21 Cam
Polypropylene

23 Centering Ring
Nickel Plated Carbon Steel

25 Slide Guide *
Polyamide PA 6,6 + 30% G.F.

26 Lower Pinion Bearing *
Polyamide PA 6,6

109 O-Ring *
NBR

110 O-Ring *
NBR

111 O-Ring *
NBR

113 Bolt
Stainless Steel

118 O-Ring *
NBR

119 O-Ring *
NBR

125 Washer
Stainless Steel

471 Slip Washer *
Stainless Steel

934 Nut
Stainless Steel

985 Nut
Stainless Steel

SPRING RETURN ACTUATOR (ASR)

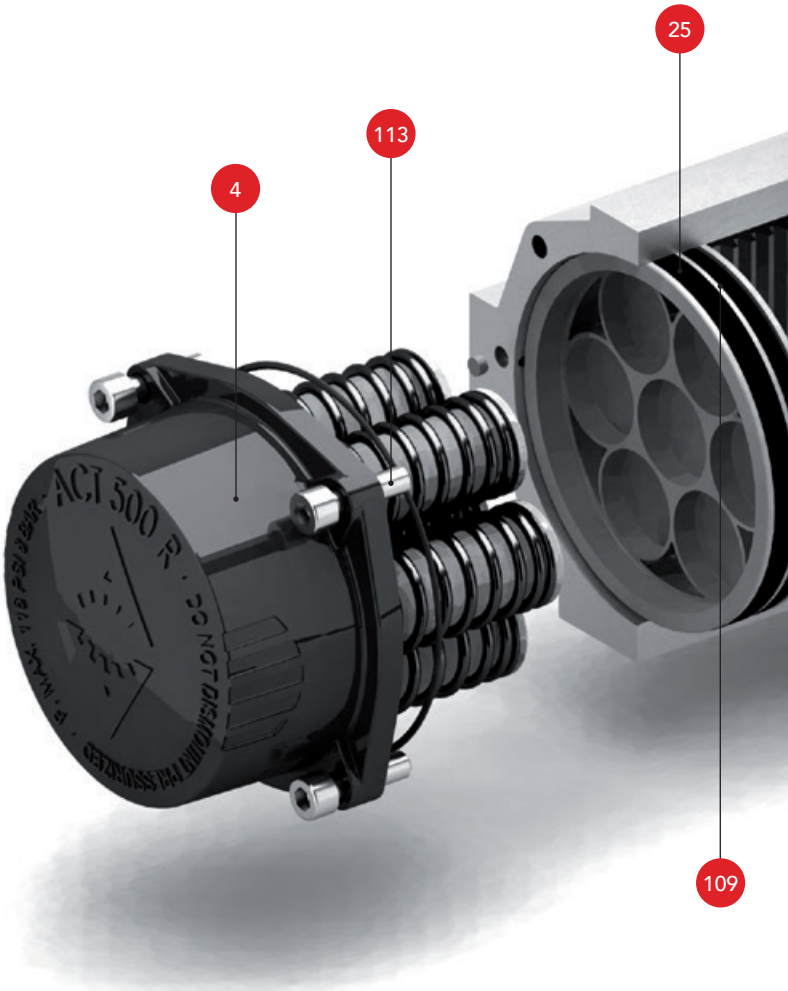

POSITION INDICATOR

FROM SIZE 20 TO 850



FROM SIZE 1200 TO 4000



Inserts
Stainless Steel

Position indicator & Cams
Polypropylene

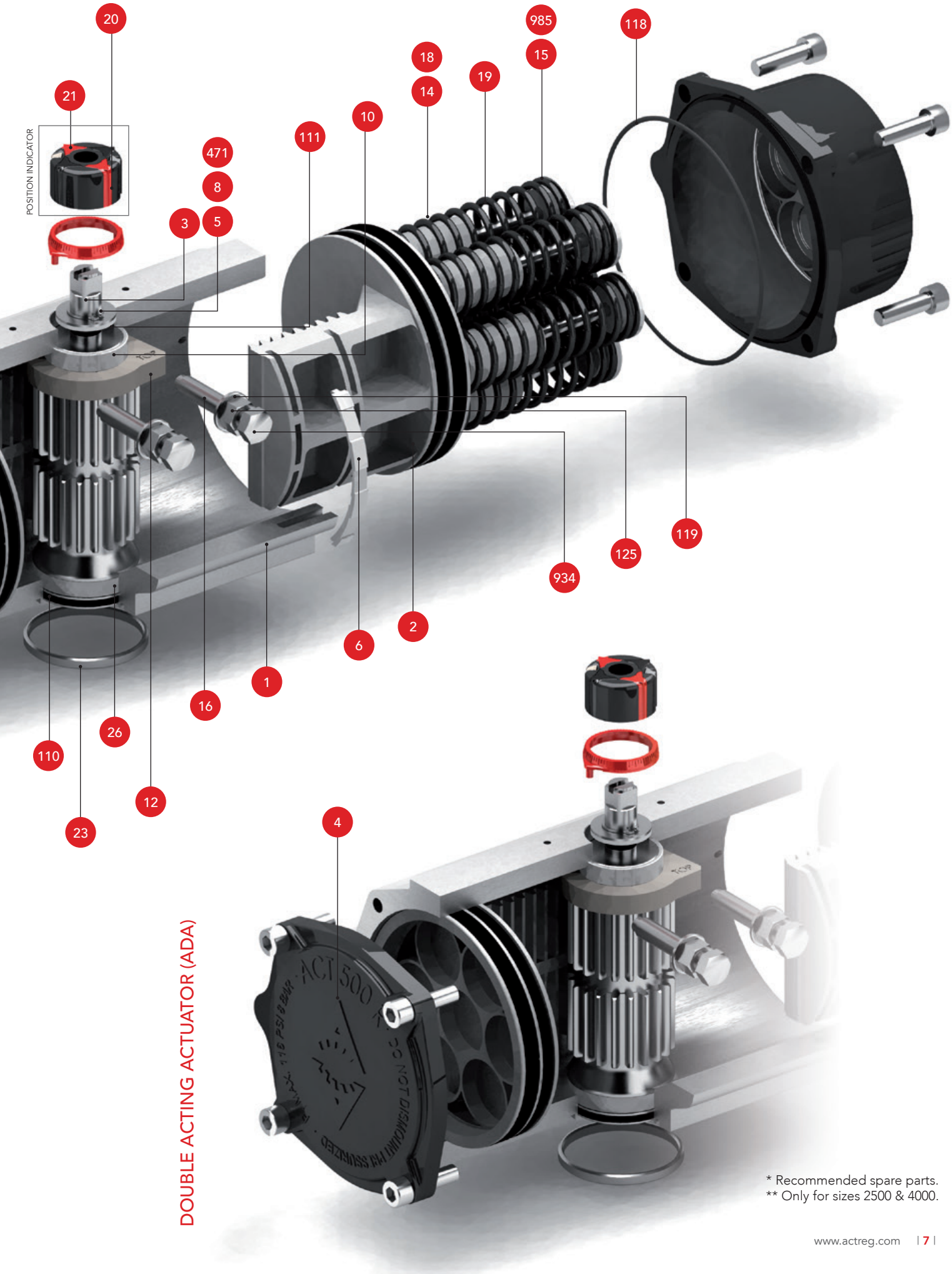

* Recommended spare parts.
** Only for sizes 2500 & 4000.

GENERAL DIMENSIONS

SIZES 10 | 20 | 40 | 80 | 130 | 200 | 300 | 500 | 850

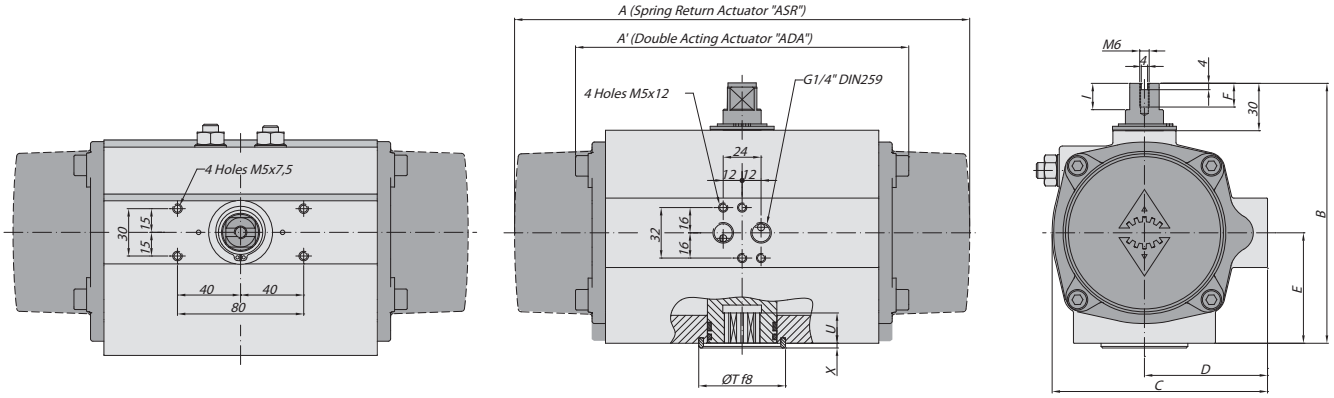

SIZES 1200 | 1750

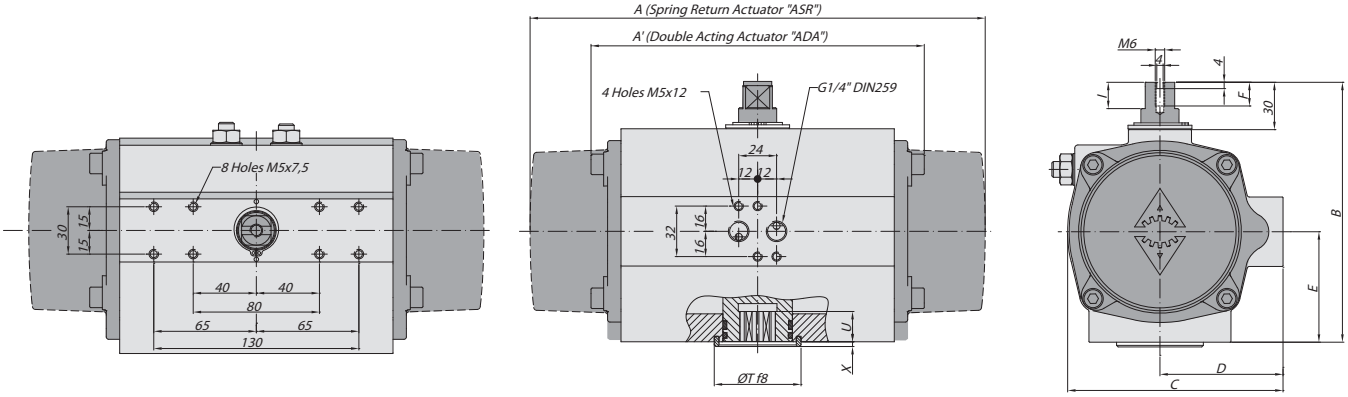

SIZE 2100

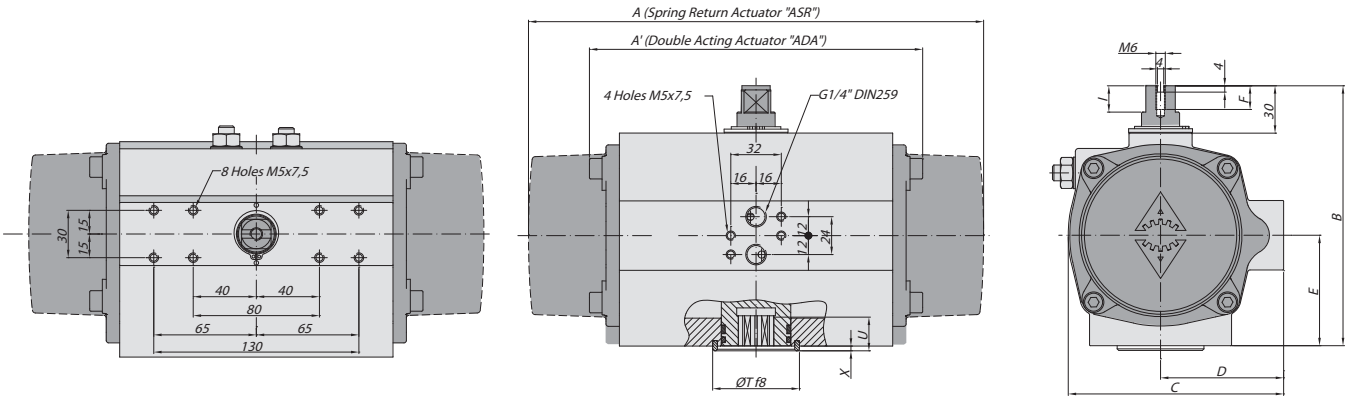

DOUBLE ACTING & SPRING RETURN ACTUATORS GENERAL DIMENSIONS (mm)

SIZE	A	A'	B	C	D	E	F	I	R	øS	ISO 5211	øL	MxV	ISO 5211	øL1	M1xV1	øT	X	U
10	-	100	76	56	33	23	9	6	9	12,5	F03	36	M5x8	-	-	-	11	2	12
20	163	145	96	76	48	34	9	12,5	9	12,5	F03	36	M5x8	F05	50	M6x10	25	2	10
20	163	145	96	76	48	34	9	12,5	14	18,1	F05	50	M6x10	-	-	-	35	3	12
20	163	145	96	76	48	34	9	12,5	14	18,1	F04	42	M5x10	-	-	-	35	3	12
40	195	158	115	91	56	45	9	12,5	14	18,1	F04	42	M5x10	-	-	-	35	3	12
40	195	158	115	91	56	45	9	12,5	14	18,1	F05	50	M6x10	-	-	-	35	3	12
80	217	177	137	111	66	55	12	12,5	17	22,5	F05	50	M6x10	F07	70	M8x16	55	3	19
130	258	196	147	122	71	60	12	12,5	17	22,5	F05	50	M6x10	F07	70	M8x16	55	3	22
200	299	225	165	135.5	78	70	12	12,5	17	22,5	F07	70	M8x16	F10	102	M10x16	55	3	23

SIZE 2500

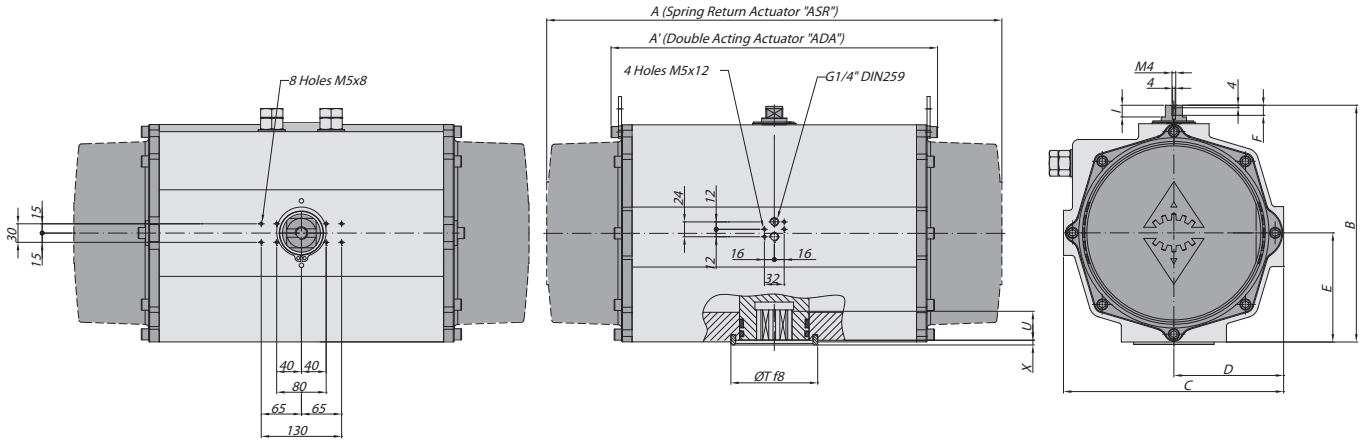

SIZE 4000

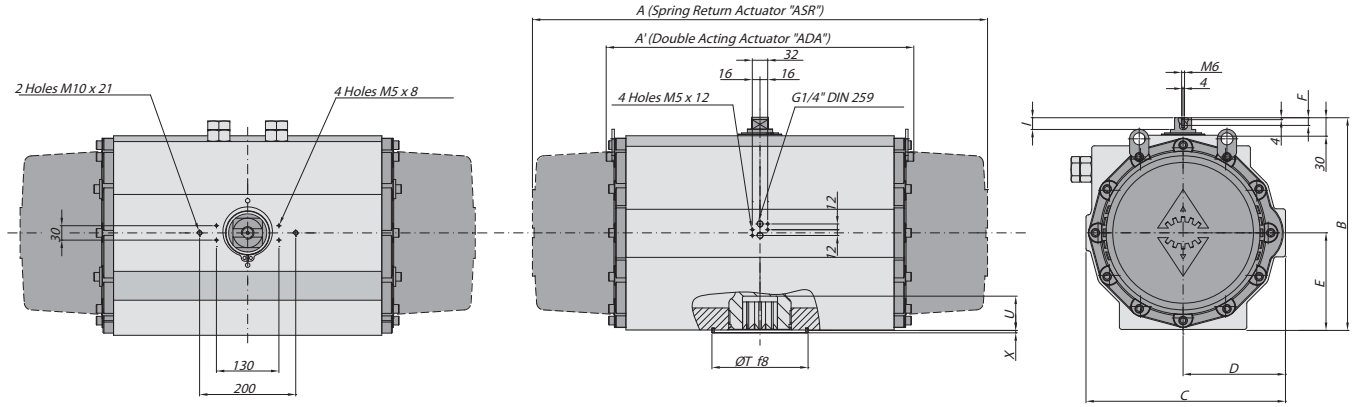

ISO 5211 DETAIL

SIZES
10 | 20 | 40 | 500 | 1750 | 2100 | 2500

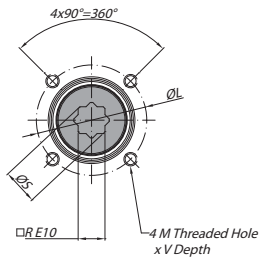

SIZES
20 | 80 | 130 | 200 | 300 | 850 | 1200

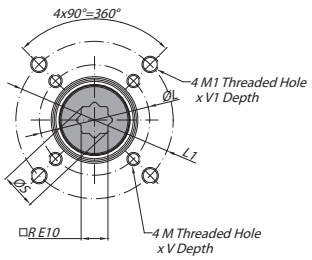

SIZE
4000

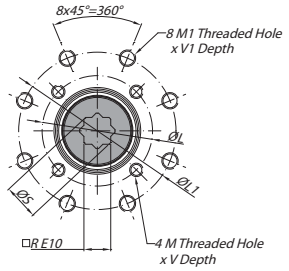

DOUBLE ACTING & SPRING RETURN ACTUATORS GENERAL DIMENSIONS (mm)

SIZE	A	A'	B	C	D	E	F	I	R	øS	ISO 5211	øL	MxV	ISO 5211	øL1	M1xV1	øT	X	U
300	348,5	273	182	152,5	86	80	12	12,5	22	28,5	F07	70	M8x16	F10	102	M10x16	70	3	24
500	397	304	199	173	96	85	12	12,5	22	28,5	F10	102	M10x16	-	-	-	70	3	32
850	473	372	221	191,5	106	98	12	12,5	27	36,5	F10	102	M10x17	F12	125	M12x20	85	3	39
1200	560	439	249	212,5	116	114	16	18,6	36	48,5	F10	102	M10x17	F14	140	M16x26	100	4	48
1750	601	461	280	242,5	131	130	16	18,6	36	48,5	F14	140	M16x26	-	-	-	100	4	50
2100	702	510	313	276,5	148	147	16	18,6	46	60,1	F16	165	M20x29	-	-	-	130	4	50
2500	738	518	383	356	177,5	176,5	16	18,6	46	60,2	F16	165	M20x29	-	-	-	130	4	58
4000	940	630	434	415	213	201	16	18,6	55	72,5	F16	165	M20x30	F25	254	M16x30	200	4	60

DOUBLE ACTING ACTUATOR TORQUE OUTPUT (Nm)

Size	3 bar		3,5 bar		4 bar		4,5 bar		5 bar		5,5 bar		6 bar		6,5 bar		7 bar		8 bar		10 bar		Weight (kg)
	0°	90°	0°	90°	0°	90°	0°	90°	0°	90°	0°	90°	0°	90°	0°	90°	0°	90°	0°	90°	0°	90°	
10	3		4		4,5		5,1		6		6,5		7		7,5		8,2		9,1		11		0,64
20	9,7		11,4		13		14,6		16,2		17,8		19,5		21,1		23		26		-		1,4
40	20,3		23,7		27,1		30,5		33,9		37,3		41		44		47		54		-		2,1
80	38,5		44,9		51,3		57,7		64,1		70,5		77		83		90		103		-		3
130	59,1		68,9		78,7		88,6		98,4		108,3		118		128		138		157		-		3,8
200	88		102		117		131		146		161		175		190		205		234		-		5,6
300	145		170		194		218		242		267		291		315		339		388		-		8,5
500	217		253		289		325		361		397		433		469		505		577		-		11,2
850	359		419		479		538		598		658		718		778		837		957		-		16,9
1200	519		606		692		779		865		952		1038		1125		1211		1384		-		25,8
1750	707		824		942		1060		1178		1295		1413		1531		1649		1884		-		32,5
2100	1086		1267		1448		1629		1810		1991		2172		2353		2534		2896		-		49,7
2500	1730		2019		2307		2596		2884		3172		3461		3749		4038		4614		-		69,6
4000	2408		2809		3210		3612		4013		4414		4816		5217		5618		6421		-		129,4

SPRING RETURN ACTUATOR TORQUE OUTPUT (Nm)

Size	Type Pressure	3 bar		3,5 bar		4 bar		4,5 bar		5 bar		5,5 bar		6 bar		6,5 bar		7 bar		8 bar		Spring Stroke END	Spring Stroke START	Weight (kg)
		0°	90°	0°	90°	0°	90°	0°	90°	0°	90°	0°	90°	0°	90°	0°	90°	0°	90°	0°	90°	0°	90°	
20	S04			8	5	9	7	11	8	13	10	14	12	16	13	17	15	19	17	22	20	4	7	1,51
	S06 A									11	7	12	9	14	10	15	12	17	13	20	17	7	11	1,54
	S08											10	5	12	7	14	9	15	10	18	14	9	15	1,56
40	S04	16	14	20	17	23	20	26	24	30	27	33	30	37	34	40	37	43	41	50	47	5	8	2,17
	S06	14	10	18	14	21	17	24	20	28	24	31	27	34	30	38	34	41	37	48	44	7	12	2,20
	S08			15	10	19	14	22	17	26	20	29	24	32	27	36	30	39	34	46	41	10	16	2,23
	S10							20	14	24	17	27	20	30	24	34	27	37	30	44	37	12	20	2,26
	S12									21	13	25	17	28	20	32	24	35	27	42	34	15	24	2,29
	S14 A											23	13	26	17	30	20	33	24	40	30	17	28	2,32
80	S04	31	27	38	34	44	40	50	46	57	53	63	59	70	66	76	72	82	78	95	91	9	13	3,28
	S06	27	21	34	28	40	34	47	41	53	47	59	53	66	60	72	66	79	73	92	86	13	20	3,36
	S08					37	29	43	35	49	41	56	48	62	54	69	61	75	67	88	80	17	27	3,43
	S10							39	29	46	36	52	42	59	49	65	55	71	61	84	74	22	33	3,51
	S12									42	30	48	36	55	43	61	49	68	56	81	69	26	40	3,58
	S14 A											45	31	51	37	58	44	64	50	77	63	30	47	3,65
130	S06	43	36	52	46	62	56	72	65	82	75	92	85	102	95	111	105	121	115	141	134	19	27	4,40
	S08			47	38	57	48	67	58	76	68	86	77	96	87	106	97	116	107	135	127	26	36	4,50
	S10					51	40	61	50	71	60	81	70	91	80	100	89	110	99	130	119	32	45	4,60
	S12							56	42	65	52	75	62	85	72	95	82	105	92	124	111	39	54	4,70
	S14 A											70	54	80	64	89	74	99	84	119	103	45	64	4,80
200	S06	61	49	76	63	90	78	105	92	119	107	134	122	149	136	163	151	178	166	207	195	31	46	6,50
	S08			67	50	81	65	96	79	111	94	125	109	140	123	154	138	169	152	198	182	42	61	6,70
	S10					72	52	87	66	102	81	116	96	131	110	146	125	160	139	189	169	52	77	6,90
	S12							78	53	93	68	107	83	122	97	137	112	151	126	180	156	63	92	7,00
	S14 A											99	70	113	84	128	99	142	113	172	143	73	107	7,30
300	S06	102	75	126	99	151	123	175	148	199	172	223	196	247	220	272	245	296	269	344	317	51	83	9,65
	S08			112	76	136	100	160	124	185	148	209	173	233	197	257	221	281	245	330	294	68	111	9,92
	S10					122	76	146	101	170	125	194	149	219	173	243	198	267	222	315	270	85	138	10,20
	S12							131	77	156	101	180	126	204	150	228	174	253	198	301	247	102	166	10,50
	S14 A											165	102	190	126	214	151	238	175	287	223	119	193	10,80
500	S06	152	119	188	155	224	191	260	227	296	263	333	299	369	335	405	371	441	407	513	480	76	115	13,33
	S08	131	86	167	122	203	158	239	194	275	231	311	267	347	303	383	339	419	375	492	447	101	153	13,84
	S10					181	126	217	162	254	198	290	234	326	270	362	306	398	342	470	414	126	192	14,35
	S12							196	129	232	165	268	201	304	238	340	274	376	310	449	382	152	230	14,85
	S14 A											247	169	283	205	319	241	355	277	427	349	177	268	15,36
850	S06	260	209	320	269	380	328	440	388	500	448	559	508	619	568	679	627	739	687	858	807	116	177	19,7
	S08	227	159	287	218	347	278	407	338	467	398	526	458	586	518	646	577	706	637	826	757	155	236	20,3
	S10			254	168	314	228	374	288	434	348	494	408	553	467	613	527	673	587	793	707	193	295	20,9
	S12							341	238	401	298	461	358	521	417	580	477	640	537	760	657	232	353	21,6
	S14 A											428	307	488	367	547	427	607	487	727	607	271	412	22,2
1200	S06	373	289	460	376	546	462	633	549	720	635	806	722	893	808	979	895	1066	981	1239	1154	171	271	30,1
	S08	325	213	411	299	498	386	584	472	671	559	758	645	844	732	931	818	1017	905	1190	1078	229	361	31,1
	S10	276	136	363	222	449	309	536	395	622	482	709	569	795	655	882	742	969	828	1142	1001	286	451	32,2
	S12					401	232	487	319	574	405	660	492	747	578	833	665	920	751	1093	924	343	541	33,2
	S14 A									525	329	612	415	698	502	785	588	871	675	1044	848	400	631	34,3
1750	S06	477	349	595	466	712	584	830	702	948	820	1066	937	1183	1055	1301	1173	1419	1291	1654	1526	270	421	39,3
	S08	400	229	518	347	636	465	754	582	871	700	989	818	1107	936	1225	1053	1342	1171	1578	1407	360	562	41,0
	S10			441	228	559	345	677	463	795	581	912	699	1030	816	1148	934	1266	1052	1501	1287	451	702	42,7
	S12							600	344	718	461	836	579	954	697	1071	815	1189	933	1425	1168	541	843	44,4
	S14 A									642	342	759	460	877	578	995	695	1113	813	1348	1049	631	983	46,0
2100	S06	702	509	883	690	1064	871	1245	1052	1426	1233	1607	1414	1788	1595	1969	1776	2150	1957	2512	2319	384	577	60,3
	S08	574	316	755	497	936	678	1117	859	1298	1040	1479	1221	1660	1402	1841	1583	2022	1764	2384	2126	512	770	62,5
	S10			627	305	808	486	989	667	1170	848	1351	1029	1532	1210	1713	1391	1894	1572	2256	1934	640	962	64,2
	S12							861	474	1042	655	1223	836	1404	1017	1585	1198	1766	1379	2128	1741	768	1154	66,3
	S14 A									914	463	1095	644	1276	825	1457	1006	1638	1187	2000	1549	896	1347	68,0
2500	S06	1299	1045	1587	1333	1876	1622	2164	1910	2453	2199	2741	2487	3029	2775	3318	3064	3606	3352	4183	3929	508	806	85,9
	S08	1155	816	1444	1105	1732	1393	2020	1682	2309	1970	2597	2258	2886	2547	3174	2835	3462	3124	4039	3700	677	1075	89,4
	S10			1300	876	1588	1165	1877	1453	2165	1742	2453	2030	2742	2318	3030	2607	3319	2895	3895	3472	846	1344	92,9
	S12					1444	936	1733	1225	2021	1513	2310	1802	2598	2090	2886	2378	3175	2667	3752	3243	1015	1613	96,4
	S14 A							1589	996	1877	1285	2166	1573	2454	1861	2742	2150	3031	2438	3608	3015	1184	1882	99,9
4000	S06	1763	1262	2165	1663	2566	2065	2967	2466	3369	2867	3770	3269									758	1348	158,7
	S08	1549	880	1950	1282	2351	1683	2752	2084	3154	2485	3555	2887	3956	3288	4358	3689	4759	4091	5068	4399	1011	1797	164,7
	S10					2136	1301	2538	1702	2939	2104	3340	2505	3742	2906	4143	3307	4544	3709	4853	4017	1264	2246	170,8
	S12							2323	1320	2724	1722	3125	2123	3527	2524	3928	2926	4329	3327	4638	3636	1516	2696	176,9
	S14 A											2911	1741	3312	2142	3713	2544	4115	2945	4423	3254	1769	3145	182,9

Note: A=Standard

DOUBLE ACTING ACTUATOR TORQUE OUTPUT (inch lb)

Size	43.5 psi		50 psi		60 psi		70 psi		80 psi		90 psi		100 psi		110 psi		116 psi		145 psi		Weight (lb)
	0°	90°	0°	90°	0°	90°	0°	90°	0°	90°	0°	90°	0°	90°	0°	90°	0°	90°	0°	90°	
10	27		35		41		50		58		64		71		77		81		97		1.4
20	86		99		119		139		158		179		200		219		230		-		3.1
40	180		207		248		290		331		374		411		453		478		-		4.6
80	341		392		470		548		626		704		784		864		912		-		6.6
130	523		601		721		841		962		1082		1204		1321		1390		-		8.4
200	779		890		1070		1247		1430		1605		1788		1966		2071		-		12.3
300	1283		1482		1777		2070		2372		2665		2958		3256		3434		-		18.7
500	1921		2207		2647		3087		3526		3966		4406		4846		5107		-		24.7
850	3177		3655		4386		5112		5845		6578		7304		8035		8470		-		37.3
1200	4594		5287		6340		7397		8456		9510		10566		11622		12249		-		56.9
1750	6257		7189		8630		10071		11503		12945		14386		15822		16675		-		71.7
2100	9612		11054		13264		15475		17686		19897		22107		24318		25632		-		109.6
2500	15312		17614		21135		24659		28177		31703		35228		38747		40837		-		153.4
4000	21313		24507		29407		34311		39210		44116		49014		53917		56831		-		285.3

SPRING RETURN ACTUATOR TORQUE OUTPUT (inch lb)

Size	Type Pressure	43.5 psi		50 psi		60 psi		70 psi		80 psi		90 psi		100 psi		110 psi		116 psi		Spring Stroke END	Spring Stroke START	Weight (lb)
		0°	90°	0°	90°	0°	90°	0°	90°	0°	90°	0°	90°	0°	90°	0°	90°	0°	90°	0°	90°	
20	S04			64	40	85	64	109	82	125	107	145	122	165	147	184	166	195	177	35	62	3.3
	S06 A							64	41	107	80	128	96	147	113	166	136	177	150	62	97	3.4
	S08									89	45	114	69	131	87	148	109	159	124	80	133	3.4
40	S04	142	124	173	148	211	187	253	230	293	267	339	312	375	356	417	394	443	416	44	71	4.8
	S06	124	89	156	120	193	158	236	200	275	240	316	280	358	322	399	364	425	389	62	106	4.9
	S08			119	80	176	131	218	168	258	213	298	250	340	294	382	337	407	363	89	142	4.9
	S10							200	141	240	178	280	224	322	260	364	302	389	327	106	177	5.0
	S12							123	76	222	152	263	192	304	234	346	276	372	301	133	212	5.0
	S14 A									205	116	245	162	287	205	329	244	354	266	150	248	5.1
80	S04	274	239	330	295	404	369	483	448	560	525	642	606	715	680	794	758	841	805	80	115	7.2
	S06	239	186	295	242	371	318	451	398	525	472	606	553	687	634	767	714	814	761	115	177	7.4
	S08					342	272	416	345	498	427	575	504	653	582	732	661	779	708	150	239	7.6
	S10							386	298	463	374	544	456	618	529	696	608	743	655	195	292	7.7
	S12							245	175	427	321	509	403	589	483	670	564	717	611	230	354	7.9
	S14 A									400	276	477	353	556	432	634	510	682	558	266	416	8.0
130	S06	381	319	452	398	574	518	696	634	818	756	936	878	1053	1000	1175	1117	1248	1186	168	239	9.7
	S08			374	303	529	450	646	572	765	685	887	807	1009	929	1126	1051	1195	1124	230	319	9.9
	S10					476	379	598	501	720	623	839	742	956	859	1078	981	1151	1053	283	398	10.1
	S12							548	430	667	552	789	674	912	797	1029	913	1097	982	345	478	10.4
	S14 A									623	481	742	604	859	726	981	843	1053	912	398	566	10.6
200	S06	540	434	659	545	834	725	1011	902	1191	1085	1371	1259	1549	1443	1727	1621	1832	1726	274	407	14.3
	S08			534	398	754	610	937	787	1112	970	1291	1144	1469	1321	1647	1502	1752	1611	372	540	14.8
	S10					674	495	858	672	1032	855	1215	1029	1391	1205	1568	1387	1673	1496	460	682	15.2
	S12							778	557	952	740	1136	914	1312	1090	1488	1272	1593	1381	558	814	15.4
	S14 A									881	625	1056	799	1232	975	1413	1157	1522	1266	646	947	16.1
300	S06	903	664	1094	855	1396	1151	1689	1450	1982	1743	2279	2040	2577	2338	2870	2632	3045	2806	451	735	21.3
	S08			892	605	1263	945	1562	1238	1858	1540	2151	1833	2445	2126	2743	2424	2921	2602	602	982	21.9
	S10					1139	735	1432	1034	1726	1327	2028	1624	2321	1922	2614	2216	2788	2390	752	1221	22.5
	S12							1305	822	1602	1124	1895	1417	2195	1710	2490	2008	2664	2186	903	1469	23.1
	S14 A									1469	911	1771	1208	2064	1506	2362	1800	2540	1974	1053	1708	23.8
500	S06	1345	1053	1632	1340	2072	1780	2511	2219	2960	2659	3400	3099	3839	3539	4279	3983	4540	4248	673	1018	29.4
	S08	1159	761	1446	1048	1886	1488	2326	1933	2765	2376	3205	2816	3645	3255	4090	3695	4355	3956	894	1354	30.5
	S10					1691	1204	2137	1644	2579	2084	3019	2524	3459	2963	3899	3403	4160	3664	1115	1699	31.6
	S12							1945	1352	2385	1792	2824	2240	3264	2680	3709	3120	3974	3381	1345	2036	32.7
	S14 A									2199	1509	2639	1948	3078	2388	3518	2828	3779	3089	1567	2372	33.9
850	S06	2301	1850	2779	2328	3512	3052	4245	3785	4969	4517	5702	5247	6434	5974	7162	6707	7594	7143	1027	1567	43.4
	S08	2009	1407	2487	1877	3220	2609	3953	3342	4677	4075	5410	4804	6142	5532	6875	6265	7311	6700	1372	2089	44.8
	S10			2023	1338	2928	2167	3661	2900	4393	3632	5118	4356	5850	5089	6583	5822	7019	6257	1708	2611	46.1
	S12							3369	2457	4101	3189	4831	3914	5558	4647	6291	5379	6727	5815	2053	3124	47.6
	S14 A									3809	2738	4538	3471	5266	4204	5999	4937	6434	5372	2399	3647	48.9
1200	S06	3301	2558	3994	3251	5048	4305	6111	5361	7165	6421	8223	7475	9281	8530	10338	9586	10966	10214	1513	2399	66.4
	S08	2876	1885	3562	2570	4621	3630	5677	4686	6739	5740	7793	6798	8849	7856	9905	8913	10532	9541	2027	3195	68.6
	S10	2443	1204	3136	1889	4190	2948	5246	4004	6306	5067	7360	6121	8422	7176	9480	8232	10108	8860	2531	3992	71.0
	S12					3762	2269	4819	3326	5872	4385	6931	5439	7989	6495	9046	7550	9674	8178	3036	4788	73.2
	S14 A							3067	1922	5447	3704	6501	4763	7557	5820	8612	6878	9240	7505	3540	5585	75.6
1750	S06	4222	3089	5162	4021	6594	5461	8035	6903	9476	8335	10909	9776	12350	11217	13786	12653	14639	13506	2390	3726	86.6
	S08	3540	2027	4480	2967	5922	4406	7357	5840	8795	7282	10236	8719	11671	10155	13110	11597	13966	12453	3186	4974	90.4
	S10			3513	1816	5240	3346	6681	4787	8114	6228	9555	7661	10996	9102	12432	10538	13285	11391	3992	6213	94.1
	S12							6000	3728	7441	5166	8879	6608	10315	8049	11756	9485	12612	10338	4788	7461	97.9
	S14 A							3750	1998	6759	4113	8201	5551	9642	6987	11078	8428	11931	9284	5585	8700	101.4
2100	S06	6213	4505	7655	5947	9866	8158	12076	10368	14287	12579	16498	14790	18709	17001	20919	19211	22233	20525	3399	5107	132.9
	S08	5080	2797	6522	4239	8733	6449	10944	8660	13154	10871	15365	13082	17576	15292	19787	17503	21100	18817	4532	6815	137.8
	S10			4994	2430	7600	4750	9811	6961	12021	9171	14232	11382	16443	13593	18654	15804	19967	17117	5664	8514	141.5
	S12							8678	5253	10889	7463	13099	9674	15310	11885	17521	14096	18834	15409	6797	10214	146.2
	S14 A							5339	2705	9756	5764	11966	7975	14177	10185	16388	12396	17701	13710	7930	11922	149.9
2500	S06	11497	9249	13791	11543	17318	15070	20841	18593	24362	22114	27883	25635	31406	29158	34929	32681	37023	34775	4496	7134	189.4
	S08	10223	7222	12525	9524	16043	13045	19567	16569	23088	20087	26614	23613	30131	27138	33654	30658	35748	32748	5992	9515	197.1
	S10			10355	6978	14771	11025	18295	14548	21813	18069	25339	21590	28864	25113	32383	28636	34474	30730	7488	11895	204.8
	S12					13497	9001	17021	12525	20547	16051	24065	19569	27590	23093	31114	26613	33208	28703	8984	14276	212.5
	S14 A							15746	10504	19273	14024	22790	17546	26315	21068	29840	24591	31933	26685	10479	16657	220.2
4000	S06	15604	11170	18806	14364	23705	19271	28608	24168	32033	27776									6709	11931	349.9
	S08	13710	7789	16904	10991	21802	15890	26706	20787	31606	25694	36508	30592	41411	35497	43734	37817	44856	38934	8948	15905	363.1
	S10					19901	12509	24806	17412	29704	22313	34610	27211	39508	32116	41831	34436	42953	35553	11187	19879	376.5
	S12							22903	14031	27801	18932	32707	23834	37605	28737	39928	31060	41050	32181	13418	23862	390.0
	S14 A									25906	15551	30804	20453	35709	25356	38029	27679	39147	28800	15657	27836	403.2

Note: A=Standard

OTHER PRODUCTS

SY SERIES



· Heavy duty applications.
· Hydraulic or pneumatic actuators.
· Scotch yoke design.
· Up to 258616 Nm in double acting and 111245 Nm in Spring return.
· Modular design.
· ATEX.
· CE.
· VDI/VDE 3845.
· ISO 5211.

DECLUTCHABLE GEAR BOXES



· Aluminium Housing.
· Rugged construction.
· Sealed to IP-65.
· ACTREG's Actuators direct mounting.
· Compact design-low weight.
· Integral top flange.
· User friendly.
· Double adjustment stroke.

BRACKETS AND COUPLINGS



· Stainless steel, carbon steel or other materials upon request.
· Machined for every kind of valve.

SWITCH BOXES



· Micromechanical switches or inductive switches.
· Inductive switches for direct mounting.
· ATEX execution.
· Feedback and positioner.

PNEUMATIC CONTROL DESIGNS

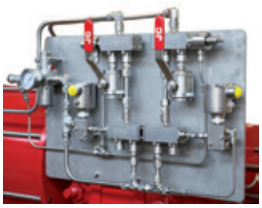

· Solenoid valves, filters, quick exhaust valves, tubing, regulators…
· Line Break systems.
· Emergency shut down systems.
· Design and manufacturing control cabinets.
· Remote control cabinets.

SPECIAL ACTUATORS



· FIRE-proof.
· Fast acting actuators.
· 100% adjustment stroke actuators.
· Special coatings.
· Special actuators for critical applications.

ACTREG
MOBILE APPLICATION

The all-in-one ACTREG interface is a "must have" for the modern automation valve business. Ideal for work, the ACTREG interface can be used to calculate torques with or without safety factors and allows you to make your own configuration with ACTREG actuators. You can also convert any unit of measurement, dimensions, torques, temperatures, and material equivalences from most common standards.

The sleek, easy-to-use interface makes actuator and torque calculations quick and easy. The user-friendly screen interface lets you see items at-a-glance, allowing you to convert quickly while on-the-go.

We have also included some information about ACTREG and the entire product range. This is a highly effective interface made by ACTREG. Anytime, anywhere, and in any situation.



Available on the **App Store**

for iPhone
Download now!

Available on the **Google play**

for Android
Download now!



ACTREG

ACTREG, S.A.U. (Headquarters)
Carrer de la Ciència, 45-47
08840 Viladecans
Barcelona (Spain)
Phone +34 93 661 44 10
Fax +34 93 654 33 93
actreg@actreg.com

ACTREG do Brasil, Sorocaba (SP)
Avenida Liberdade, 4565
Bairro Iporanga - Sorocaba - SP
CEP 18.087-170
Sao Paulo, Brasil
Phone: 0055 15 3228 1010
Fax: 0055 15 3235 9511
actreg@actregdobrasil.com.br

ACTREG Shangai Actuator Co. Ltd.
No. 125, Ji Ye Road
SheShan Industrial Zone
Songjiang District, Shanghai, China
P.R.C. 201602
Phone: +86 21 57796818
Fax: +86 21 57792426
sales@jc-valves.net.cn

ACTREG UK, LTD
Units 2 & 3 Henson Close
Telford Way Industrial Estate
Kettering Northants NN 16 8PZ
United Kingdom
Phone: 0044 1536412525
Fax: 0044 1536521616
sales@actreg.co.uk

ACTREG North America
20675 Boul. Industriel
Ste. Anne-de-Bellevue, Québec
H9X 4B2 Canada
Toll Free: 1 800 667 4819
Phone: 001 514 457 5777
Fax: 001 514 457 1348
trueline.sales@trueline.ca

For further information visit our website
www.actreg.com

Edition 11/2016