PA Ventiler AB
Sagbäcksvägen 3b
437 36 Lindom
013-992500
Info@paventiler.se

Multi-turn electric actuator

PA Ventiler AB
EN DEL AV BEIJERTECH

Operationinstruction





Please read this manual carefully before using our products

Please use the company's products correctly, unnecessary losses and accidents will be avoi ded! At the same time, the provisions of this manual shall be observed, becauseFor the occurr ence of accidental losses and accidents, it is often caused by human carelessness, negligence and carelessness!

1.The bolt strength used for valve connection shall not be less than 8.8 class.
2.Do not open the electric box cover, motor and other sealing parts outdoors in rainy days.
3.The electric actuator uses a special motor for the valve, which is a short-time working system, and the continuous working time shall not exceed the nameplate calibration time.
4.When it is not used often, it should be checked, maintained and operated regularly, it is recommended that once a month, the time does not exceed 10 minutes.
5.Do not remove the electric-related box cover in the explosive environment. When opening the electrical box cover, the power supply must be cut off first.
6.The electric actuator is stored in a clean and dry room. If it is stored outdoors, it should be kept at a certain height with the ground, and there should be moisture-proof and rainproof measures。
7.After installation or reinstallation, the first electric operation must make the valve in the middle position to che ck the opening and closing direction, and must be adjustedTest requirements for item by item debugging check each component is normal before it can be put into use.
8.Special reminder: When debugging the matching stem valve, the screw cover on the top of the actuator should be unscrewed first to avoid the top cover and its top due to too long valve strokeCover fixing screw hole damaged. T he user can also install the valve stem sheath on the top cover according to actual needs, and it is recommended to u se a pipe with an outer diameter of 70×3.0The screw thread specification is M70×2.0 below 1800N.m, screw off the screw cap and screw the sheath into the screw thread of the top cap

The company supplies according to the requirements of technical agree ments and business contracts, but only the relevant electrical schematics are provided. When ordering, the hand wheel is clockwise for the electric actuatorTo close the valve, if there are special requirements in the enviro nment, specifications, performance parameters, connection size, circuit, etc., please specify the requirements according to the model expression m ethod or thisThe company negotiated the order.。

electrical connection

1.Thread of cable protective sleeve: standard configuration M-thread 2×M25×1.5, 1×1 inch NPT

2.Cable inlet: The cable type and size are appropriate to the cable inlet, and ensure that the threaded adapter and cab le seal ring are tightened and completedFully waterproof, unused cable inlet should be sealed with threaded steel or copper co ck. Special reminder: in dangerous areas, cable inlet should be usedExplosion-proof reducing pipe and seal ring.

3.The sealing ring allows the cable to pass through the straight length of 10~15mm.

4.An M6 or M8 external ground screw is cast on the handwheel side near the flange; Internal ground terminals are a lso available.

5.When the power and control wires are connected to the wiring panel, the end of the wires should be equipped with an ins ulating sleeve; Analog and digital signals must be shieldedThe shielding layer of a cable must be grounded at both ends.

catalogue

summarize 01

technical specification 02

construction 03

major parameter 04/05

Torque control mechanism 06

Torque control mechanism 07

BYZ explosion-proof wiring diagram 08

Multi-turn ordinary series wiring diagram 09

Intelligent non-invasive electric actuator

summarize

Multi-rotary valve electric actuator, is our company on the basis of the original mature products, digest, absorb all kinds of advanced electric actuators abroadDesign and manufacturing technology, set fieldbus technology, absolute coding technology, remote control technology, magnetic switch control and other latest automatic control technology as one.Independently developed a new generation of products, with compact structure, small size, beautiful appearance, reliable and stable performance and other advantages.

Multi-turn valve electric actuator is suitable for opening and closing parts of the linear movement of the valve, such as gate valve, globe valve, diaphragm valve, gate, etc., used forThe opening, closing or adjustment of valves.

The performance of the multi-turn valve electric actuator conforms to the provisions of GB/T28270-2012 "Intelligent Valve electric Device"; flameproofType performance conforms to GB3836.1-2010 "Explosive Environment Part 1", Gb3836.2-2010 "Explosive environment NoPart 2 "and GB/T24922-2010" Flame-proof valve electric device Technical conditions ".

Technical specification

power supply	Motor power supply is AC380V,AC380±10%V 50±10%HZ, special orders 220V ~ 660V, 60HZ; DC24V, DC48V;
level of protection	Ip67, Special order IP68 (4 m depth 68 hours);
environment temperature	-20 ~ +60℃ (Special orders -40 ~ +70℃);
relative humidity：	≤90%（+25℃）；
Work system：	Short 10 minutes (15-30 minutes for special orders), Class F insulation；
explosion-proof sign	Exdb IIBT6 GB/Extb IIIC T80℃ Db;
	Ex db IICT6 Gb/Extb IIIC T80℃ Db;
	It is suitable for dangerous places with ⅡA ~ ⅡC explosive combustible gas, temperature group T1 ~ T6

model designation

1 2 3 4 -5 /6 (7)

- Product design serial number BYZ
- Drive type: Z - multi-turn ZXC - straight stroke
- applied environment:
  W - Outdoor environment without special requirements (generally not indicated), EX - flameproof type
- Rated torque: Arabic numerals (unit :N·m)
- Rated speed: Arabic digit (unit: r/min)
- Control type: S - ordinary switch type ZP - integral type FQ - non-invasive
- Working voltage: 220V/440V/660V(380V is not indicated) DC24V,DC48V

Model example

BYZ-EX90S-24r/min:
It is an explosion-proof switch type electric actuator with a rated output torque of 900N·m.
The output shaft speed is 24r/min and the rated voltage is 380V。

BYZ-EX90ZP-24r/min:
It is an explosion-proof non-invasive electric actuator with a rated output torque of 900N·m.
The output shaft speed is 24r/min and the rated voltage is 380V.

BYZXC-EX90FQ-24r/min:
It is an explosion-proof direct stroke non-invasive electric actuator with a rated output torque of 900N·m.
The output shaft speed is 24r/min and the rated voltage is 380V。

Intelligent technical parameters

Field control: When the "switch knob" of the actuator is in the "field", the "operation knob" or remote control can be used to control the actuator on or off at the scene. Field operation can be set to "point"Or "Hold" control mode.

Remote switching control (remote manual control) : In an emergency, ESD signals can take precedence over any on-site and remote signals, so that the actuator can enforce the "no-move", "on" and "off". EThe SD signal can be selected to be active at a high or low level, or whether the priority motor overheats or the priority mode button cuts off the operation control at the stop position or during the priority period.

Remote analog control (remote automatic control) : intelligent electric actuator has the ability to control the bus. The actuator can realize Profibus-DP(V0 V1 V2), Modbus, Devicenet, FF,Hart bus protocol and other control.

ESD control :SA series intelligent electric actuator with two-wire electric control function. It can realize the special control requirements of "letter opening", "no letter closing" and "letter closing" and "no letter opening".

Fieldbus control (remote digital control) : When the actuator "switch knob" is in the "remote", there are three ways to control the switching quantity, namely, on, off, stop/hold; On and off controls can be passedExternal wiring can be controlled in "hold" or "point" mode.

Two-wire control: When the actuator "switch knob" is in the "distance", the user controls the operation of the actuator through an analog quantity such as 4-20mA to achieve accurate positioning of the equipment. Valve limit protectionThe actuator stops automatically when it runs to the switch position.

Torque overload protection: prevent the valve from getting stuck during the operation of the actuator, and increase the torque to ensure the safety of the valve。

Automatic phase sequence adjustment: ensure that the motor is connected to the correct phase sequence rotation, without requiring the user to consider the wiring phase sequence of the actuator power supply.

Instantaneous reverse protection: When the actuator receives the action command in the opposite direction, it automatically adds a time delay to prevent unnecessary wear and tear on the connected equipment.

Power phase loss protection: the actuator has a reliable power phase loss protection function, when the power phase loss, prohibit the motor from running, to avoid the motor overheating caused by the phase loss operation.

Plug protection: When the actuator executes the open action, the torque protection function is temporarily prohibited within 0.2-0.3 seconds after sending the excitation motor signal; When the actuator performs the closing action, theThe torque protection function is temporarily disabled for 5-8 seconds after the signal of the excitation motor, so as to achieve the release of the card when stuck.

Motor overheat protection: the winding end of the motor is equipped with a thermal relay to directly detect the winding temperature of the motor. When the thermal relay detects overheating of the winding, the control circuit will power off the motor, thus prohibiting the actuator action。

Electrical isolation protection: the actuator and the external contact input and output channels are photoelectric isolation, to ensure that the actuator is not disturbed, reliable and stable work.

construction

The structure of multi-turn series intelligent electric actuator is introduced

The multi-rotation series consists of a motor, a decelerating mechanism , a torque controller, a stroke controller, a hand-electric switching mech anism, a manual operating mechanism, an intelligent control module o f the drive electrical element and a field operation panel, etc. Its mecha nical structure is shown in Figure 3.

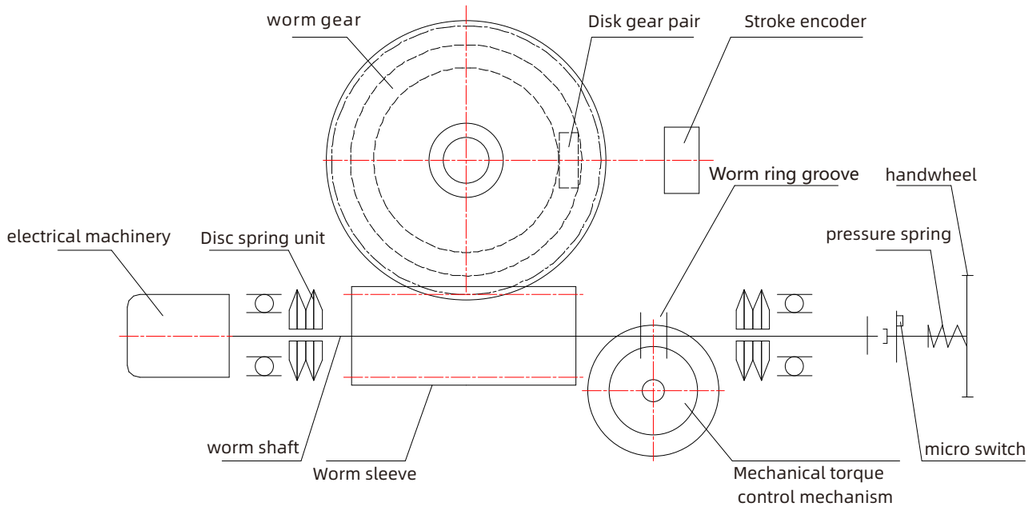

main performance parameters

type specification	output torque N·m	Output speed r/min	Maximum stem diameter mm	Manual speed ratio	Rated power of motor kW	rated current A	Reference weight (Switch/smart) Kg
BYZ-10	100	24	28	1:60	0.25	1.2	19/22
BYZ-15	150	24	28	1:60	0.37	1.38	19/22
BYZ-20	200	24	40	1:60	0.55	2.7	32/39
BYZ-30	300	24	40	1:60	0.75	3.5	35/40
BYZ-45	450	24	48	1:60	1.5	4.12	50/53
BYZ-60	600	24	48	1:60	1.8	4.5	50/55
BYZ-90	900	24	60	1:60	2.5	6	62/65
BYZ-120	1200	24	60	1:60	3	7.9	62/65
BYZ-180	1800	24	70	1:30	4	8.87	120/125
BYZ-250	2500	24	70	1:30	5.5	12.05	128/133
BYZ-350	3500	18	80	1:30	7. 5	15.6	150/158
BYZ-500	5000	18	80	1:30	10	20.5	180/190

Note: The above parameters are for conventional AC380V supply, if there is a special voltage need can be explained when ordering。

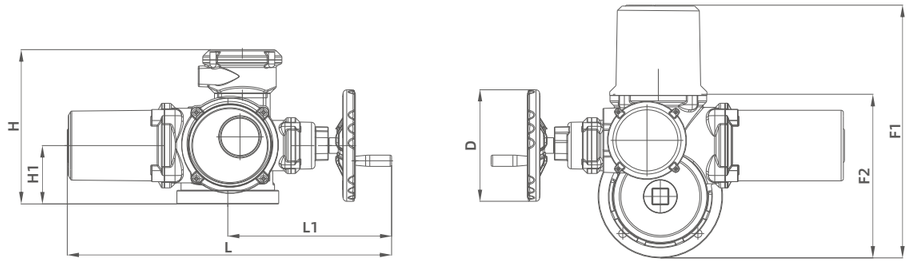

Shape structure and size

Model size	L	L1	H	H1	F2 ordinary type	F1 Intelligent	ΦD
BYZ-05/15	580	320	287	92	282	426	200
BYZ-20	625	342	370	120	330	475	200
BYZ-30	675	342	370	120	330	475	200
BYZ-45/60	720	360	345	130	346	525	250
BYZ-90/120	780	375	380	140	420	566	250
BYZ-180/250	868	400	400	150	475	620	300
BYZ-350	868	400	400	150	475	620	300

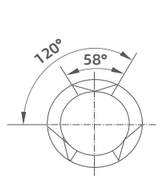

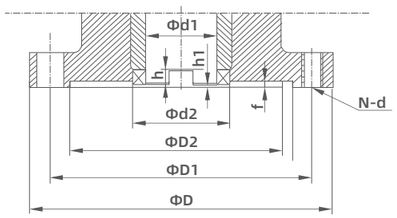

Torque type connection Size (Jb2920)

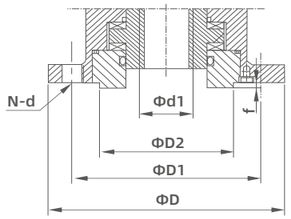

Thrust type connection size (GB/T12223-2005)IS05210

Connection standards and dimensions (torque type Jb2920)

The structural diagram and dimensions of the connection between BYZ series valve electric device and valve are shown in the table;

Denso type	seat No.	D	D1	D2	d2	d1	h	h1	f	n-d
BYZ10-15	JB2	145	120	90	45	30	8	2	5	4-M10
BYZ20-30	JB3	185	160	125	58	42	10	2	5	4-M12
BYZ45-60	JB4	225	195	150	72	50	12	2	5	4-M16
BYZ90-120	JB5	275	235	180	82	62	14	2	5	4-M20
BYZ180-250	JB7	330	285	220	98	72	16	3	6	4-M24
BYZ350	JB8	380	340	280	118	82	20	3	3	8-M22

Connection standards and dimensions (thrust type GB/T 12223-2005)

Francois	D	D1	D2 f8	d1 (Max)	n-d	f
F10	125	102	70	Tr28	4-M10	3
F14	175	140	100	Tr36	4-M16	4
F16	210	165	130	Tr44	4-M20	5
F25	300	254	200	Tr60	8-M16	5
F30	350	298	230	Tr70	8-M20	5
F35	415	356	260	Tr80	8-M30	5

Note: The above parameters are general supply, if there is special need can be explained when ordering。

Selection knowledge

Select the matching ratio to determine the worm gear speed ratio: electric torque × speed ratio × mechanical efficiency = output torque

Example: Multi-turn BYZ20/200 (DENso torque) ×5 (5:1) ×0.85 (parachute tooth transmission efficiency) =850N·m

Example: Multi-turn BYZ20/200 (DENso torque) ×15 (15:1) ×0.7 (two-stage parachute tooth transmission efficiency) =2100N·m

Example: Partially turning BYZ20/200 (electric torque) ×65 (65:1) ×0.3 (single-stage worm gear drive efficiency) =3900N·m

Example: Partially turning BYZ20/200 (electric torque) ×650 (650:1) ×0.25 (two-stage worm gear drive efficiency) =32500N·m

Pay attention to the input and output limits, prevent the bearing capacity is too large, the reducer gear is damaged, consider the module of the gear, consider the structure of the gear box, the material heat treatment process, etc

Partial rotation time calculation: gearbox speed ratio ÷4÷ Denso speed = opening time

Example :60÷4÷24=0.625/37.5 seconds

Multi-rotation time calculation: stroke ÷ pitch ÷ Denso speed × gearbox speed ratio = opening time

Example :500÷8÷24×5=13.02

Electric torque and gearbox speed ratio are calculated according to rated torque and opening time limit

Partial rotation calculation method:

Rated torque ÷ (rated time × speed ×4) ÷ efficiency = input torque of Denso

Example :5000Nm÷ (2×24×4) ÷0.25=104Nm

Multi-turn calculation method:

Example :1800Nm (rated torque), opening time 3 minutes, when the speed ratio is known, 500 valve stroke ÷10 (valve stem pitch)=50 turns (valve opening turns),50×4 (gearbox speed ratio) =200, 200÷3 (time requirement) =66.6, 1800÷4÷085=529Nm (Denso torque)

Example :1800Nm (rated torque), open time 3 minutes, unknown speed ratio, 1800Nm÷400Nm(Denso torque)÷0.85 (transmission efficiency) =5.2 (gearbox speed ratio)

Torque control mechanism

Multi-rotation series intelligent integration with dual torque protection function, namely electronic torque measurement protection and mechanical torque protection (see Figure 5, 6); Equal electron momentWhen the measurement module fails out of control, the mechanical torque is used as a second protection to protect the operation of the driven device and the actuator itself, so as to make the system runLine is safer and more reliable;

The working principle of the multi-rotation series mechanical torque control mechanism: when the output shaft is subjected to a certain torque, the worm produces axial displacement in addition to rotation.
Drive the crank, drive the shaft and CAM to press the micro switch when the crank moves, cut off the motor power supply, so that the motor stops, so as to achieve the output of the electric actuatorTorque control to achieve the purpose of protecting the electric valve (factory has been calibrated according to the standard).

The working principle of the multi-rotation series mechanical torque control mechanism: when the output shaft is subjected to a certain torque, the worm produces axial displacement in addition to rotation.The circular rack on the worm drives the gear shaft to rotate, and then drives the CAM to press the micro switch, cut off the motor power supply, and make the motor stop, so as to realize the electric powerThe output torque of the device is controlled to achieve the purpose of protecting the electric valve (which has been calibrated according to the standard when leaving the factory).

Multi-rotation series mechanical torque control mechanism

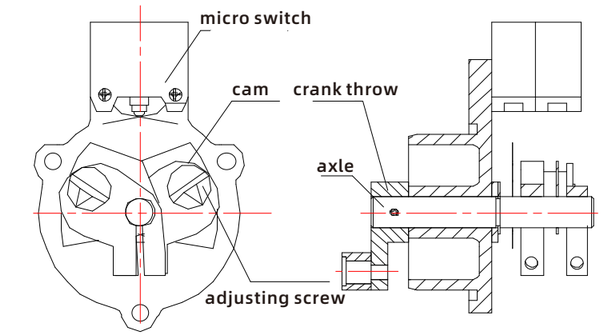

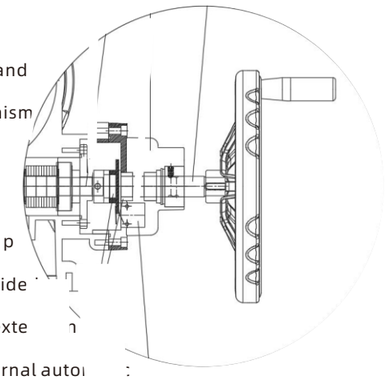

The utility model relates to a valve structure, in particular to a valve hand

Automatic quick switch to prevent misoperation of the protection mechanism

olve the valve manual automatic cutting

Change the problem. Comprises a motor worm, a hand wheel seat and a

hand wheel rod, and the hand wheel seatA handwheel positioning ring is p

rovided, and the inner side wall of the handwheel positioning ring is provide

with elasticityThehandwheel rod is arranged on an end of one end of an exte

wheel seatRelative to the external manual groove and relative to the internal auto

groove, new designSteel ball handwheel positioning mechanism, can be quickly positioned, whether manual or automatic

It is not easy to disengage, ensure safety, and is hidden; A new type of automatic hand cutting with a three-jaw connection mechanism

Change the connection mechanism, fast connection speed, high stability; Waterproof, dustproof and moisture-proof microswitch can be used in damp and dusty places。

Torque control mechanism adjustment

1. ordinary type

.1.1Torque control mechanism (as shown in Figure 1 below): composed of crank, stop block, CAM index plate, support plate a nd micro-switch, when the output shaft is subjected to a certain resistance torque, worm in addition to rotation, but also gen eratedAxial displacement drives the bend to rotate, and at the same time makes the block produce an angular displacement, so as to follow the CAM and lift the support plate up. When the torque on the output shaft increases to a predetermined value, it is supported on the plateLift until the micro switch action, cut off the power, motor stop, in order to achieve the control of th e output torque of the electric device.

1.2Torque control mechanism adjustment: first adjust the torque; Start with a small torque value and gradually increase the t orque value until the valve is tightly closed. Adjust the switch direction torque according to the valve operating characteristic s, oneGenerally, the open torque is larger than the torque in the off direction. The above adjustments are adjusted under no-l oad, no-medium pressure and other factors. When there is pressure and temperature, attention should be paid to whether it c an be tightly closed. If it is not tight, it must be appropriateIncrease the torque value by turning it off firmly.

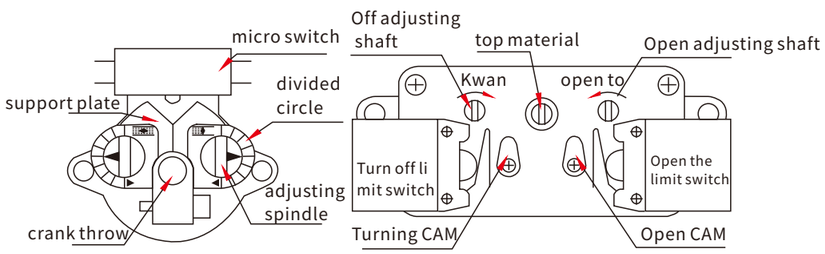

A torque control mechanism　　Two stroke control mechanism

Stroke control mechanism

1. Stroke control mechanism (as shown in Figure 2) : consists of a decade gear group, ejector rod, CAM and micro-switch, referred to as the co unter. Its working principle is by a driving pinion (Z=8) belt in the reduction box

The counter works. If the counter has been adjusted to open or close the valve, the CAM will be turned 90° when the counter is turned to the pre-adjusted position (number of turns) with the output shaft

Press the micro switch action, cut off the power supply, and stop the motor to realize the control of the stroke (number of turn s) of the electric device. In order to control the valve with more turns, the CAM can be adjusted to turn 180° or

270° pressure microswitch action。

2. Stroke control mechanism adjustment: Close the valve manually. Remove the travel control mechanism, use the screwdriver to push th e top rod of the travel control mechanism and turn 90° to make the driving pinion and the counter gearGroup off. Use a screwdriver to rotate th e "off" to adjust the axis, rotate in the direction of the arrow until the CAM presses the spring pressure plate to stop the micro switch action, th en the off stroke is preliminarily adjusted. Release the ejector lever to make the drive gear withThe gear on both sides is engaged correctly, in o rder to ensure its correct engagement, after releasing the ejector rod, you must use a screwdriver to slightly turn the adjustment shaft, at this t ime you can open a few rounds of electric power, and then close, depending on the direction of the stroke isIf it does not meet the requiremen ts, it can be re-adjusted according to the above procedures. Open direction adjustment: After the close direction adjustment, open the valve to the desired position by hand (note that the stroke control mechanism cannot be removed at this time, noThen the off adjustment is disrupted), and then the stroke control mechanism is removed, and the "open" axis is rotated in the direction of the arrow until the CAM presses the spri ng pressure plate to make the microswitch operate. Remake the travel mechanism with the masterWhen the moving gear engages, the headin g stroke is adjusted. The stroke control mechanism can be repeated several times after adjustment. Generally, the open valve is controlled at a bout 90%.

3.Adjustable opening indicator (Figure 3): composed of reduction gear group, adjusting gear, valve opening dial, CAM, micro switch, and potentiometer. On the spotDuring debugging, the adjustment gear can be adjusted to the required position according to the number of turns of the valve switch, and the reduction gear group is engaged (there is the required number of turns on the column)The number). When the valve is in the process of opening or closing, the opening dial is turned after deceleration indicating the valve switching quantity, indicating the Angle is synchronized with the valve switching quantity.Supply remote indicating valve.

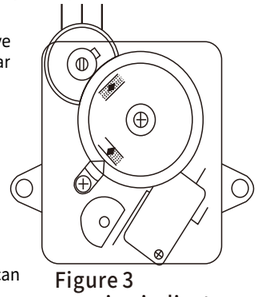

Figure 3
opening indicator

4.Adjustable opening indicator (Figure 3): composed of reduction gear group, adjusting gear, valve opening dial, CAM, micro switch, and potentiometer. On the spotDuring debugging, the adjustment gear can be adjusted to the required position according to the number of turns of the valve switch, and the reduction gear group is engaged (on the column)Number of circles required). When the valve is in the process of opening or closing, the opening dial is turned after deceleration, indicating the amount of valve switching, indicating the Angle and valve switchingQuantity synchronization. Supp ly remote indicating valve. The setting screw of the gear on the potentiometer shaft can be used.

BYZ explosion-proof wiring diagram

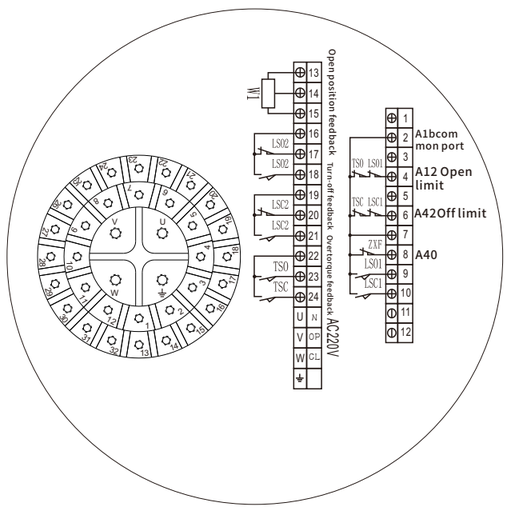

AC220V explosion—proof switch type wiring diagram

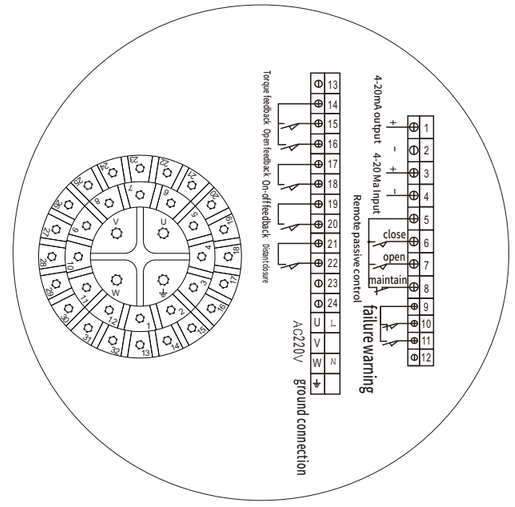

AC220V explosion-proof overall switch type/regulation type wiring diagram

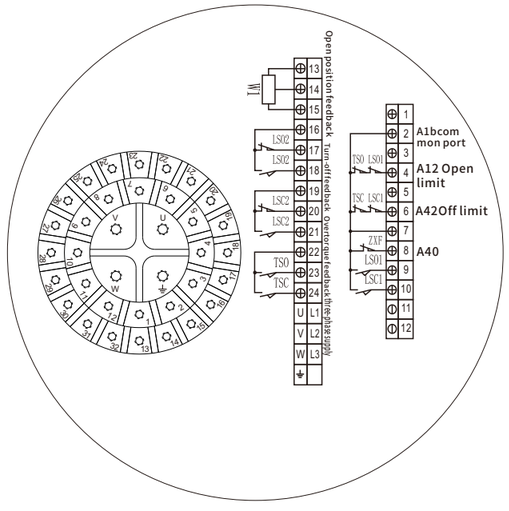

AC380V explosion—proof switch type wiring diagram

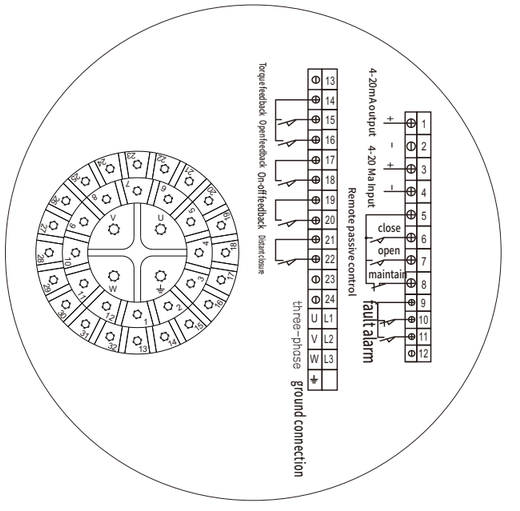

AC380V explosion-proof integral switch type/regulator type wiring diagram

Multi-turn ordinary series wiring diagram

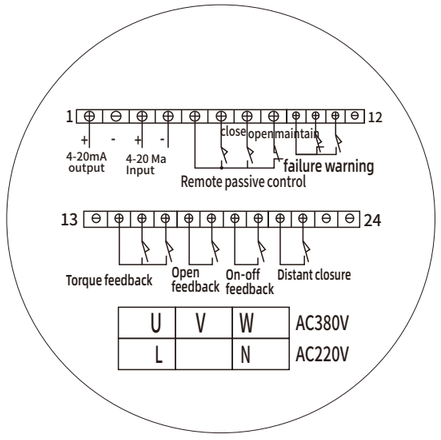

Overall switching/regulating wiring diagram

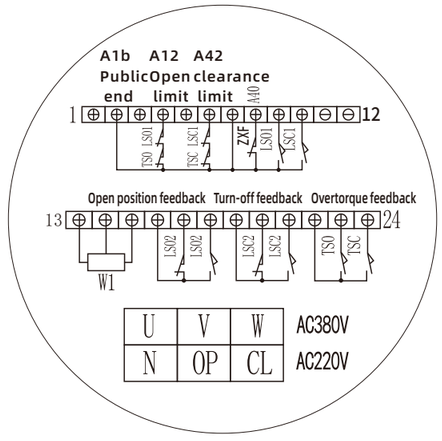

Ordinary type wiring diagram

Multi-turn series diagram Schematic diagram and typical wiring of common switch type electrical apparatus

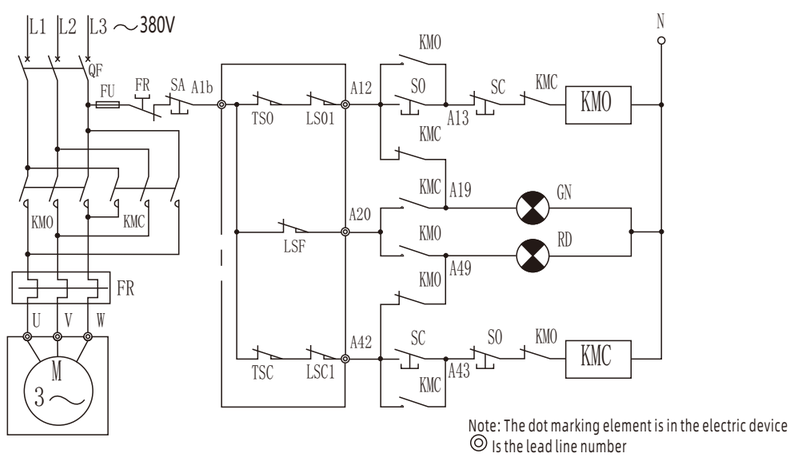

Note: The dot marking element is in the electric device
◎ Is the lead line number

code	name	model	quantity	remark	code	name	model	quantity	remark
FR	thermorelay		1	user-supplied	LSF	Flash switch	V-157	1	
KMO KMC	AC contactor	GJ10	1	user-supplied	W1	potentiometer	WX14-12	1	
SA SO SC	button	LA11-11D	3	user-supplied	M	electrical machinery	YDF2-W	1	
TSO TSC	torgue switch	DK3-2A	1		TH	thermoswitch		1	special orders
LSO LSC	travel switch	HWK-22A	1		RT	air space heater		1	special orders

Function overview

This product is suitable for integrated control of intelligent electric actuator. It can accept the switching signal, proportional signal and bus signal, and drive the solid state relay and other driving components to realize the opening of the actuator after processingOff operation. Perfect overheat, phase loss and overtorque protection circuit inside the controller. The controller can provide proportional signal feedback and multiple field programmable relay status feedback. The control signal is divided into openThe power supply is divided into single phase and three phase.

I. Main technical characteristics and indicators:

1. Input voltage: three-phase 380VAC. Range: AC340V ~ 420V 50/60Hz single-phase 220VAC. Range: AC200V ~ 240V 50/60Hz Other input voltages can be customized
2. Position detection using advanced absolute encoder. No dead zone, can achieve a real sense of non-invasive debugging, use. Accurate encoder position control without the use of travel switch limits,
3. The unique two-speed control mechanism can avoid the surge effect of the fluid during the operation of the actuator.
4. The infrared setter and knob (magnetic isolation technology) can set working parameters, convenient and practical, and truly realize no open cover.
5. Simple and intuitive Chinese menu, human-machine exchange interface is more user-friendly, easy to debug, and English menu can be provided for export support.
6. Perfect 3-level password protection, which can authorize different customers or operators separately to prevent actuator failure caused by wrong parameters.
7. Provide 5 field programmable monostable relay feedback, provide 1 alarm monostable relay feedback,
8. Analog signal feedback: 4 ~ 20mA, signal load resistance: 50Ω ~ 750Ω, accuracy: 0.5%;
9. Analog signal input: Detect the input opening signal, usually DC4-20mA current signal, internal load size 195Ω;
10. Switch signal input: passive dry contact input, built-in 24V DC power supply, the common end is 24V+. Detect remote open, close, hold and other control signal input;
11. Isolation of each signal: each input and output terminal is isolated by relay and photoelectric coupler, which can withstand 2000V surge voltage;
12. Drive signal output: thyristor output, suitable for reversible control, turn-on duration rate 50%, turn-on times per hour ≤1200 times
13. Operating temperature range: -30℃ ~ +70℃.
14. Use humidity range ⩽90%RH, no condensation, no strong corrosive, flammable and explosive gas or dust around.

Second, operation mode

2.1 On-site electric operation

The actuator is equipped with two knobs on the electrical cover, one is a mode selection knob and one is an operation knob. For field electric operation, the "mode selection knob" needs to be placed in the "field" positionThen use the "operation knob" to move the actuator.

2.1.1 Point operation

Turn the "operation knob" to the "off" position and keep it still. At this time, the actuator moves in the direction of closure. Once the knob is released, the knob will automatically return to the original position and the actuator will stop working.

Turn the "operation knob" to the "open" position and keep it still. At this time, the actuator moves in the open direction. Once the knob is released, the knob will automatically return to the original position and the actuator will stop working。

2.1.2 Hold Operation

Turn the "Operation knob" to the "Off" position, and the actuator moves in the off direction. Then release the knob, the knob will automatically return to the original position, but the movement of the actuator in the direction of closure will continueContinue until the conditions for stopping the action are met (such as passing the torque, reaching the threshold, etc.).

Turn the "Operation knob" to the "On" position, and the actuator moves in the open direction. Then release the knob, the knob will automatically return to the original position, but the movement of the actuator in the open direction will continueContinue until the conditions for stopping the action are met (such as passing the torque, reaching the threshold, etc.).

2.2 On-site Stop

When the mode selector button is in the "Stop" position, the actuator disables all electric operations.

2.3 Remote Control operations

2.3.1 Remote switch control

The conditions for entering the remote switching control mode are as follows: 1. The mode knob is in the "distant" position; 2, manual/automatic switch off.

Set the working parameters of the actuator

3.1 Key Definition

3.1.1 Keys represented by the handheld setter:

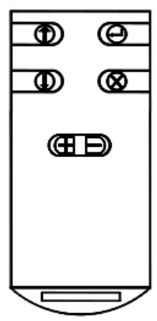

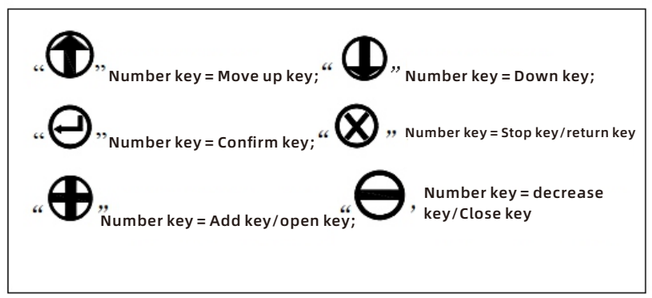

3.1.2 Buttons represented by mode buttons:

Confirmkey:Modebuttonfromthe"Stop"position ⟶ "Field" location, hereinafter referred to as press the confirm key;
Back key: Mode button from the "Stop" position⟶ Back key: Mode button from the "Stop" position

3.1.3 Buttons represented by operation buttons:

Down key: Operate button⟶ "Off" position, hereinafter referred to as pressing the down key;
Add key: operate button⟶ "Open" position, hereinafter referred to as pressing the add key;

3.2 LCD

The actuator is equipped with a lattice row liquid crystal display.
Its layout has I district, II district and III district. Zone I is the valve position display zone.
Display the current valve position value in real time in the form of the percentage of valve position opening;
Area II is the control mode display area;
Zone III is the operation status and alarm information display area (see thefollowing "Four, alarm information)。

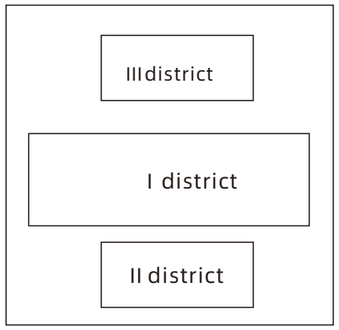

When entering the menu of working parameter setting, the LCD screen will use the I zone, II zone and III zone

3.3 Powering On or Resetting the Server

3.3.1 System Power-on Self-Test

After power-on, the control system of the actuator first self-checks the instruction, program area, data area and A/D conversion function in turn. If the self-test is normal, the LCD liquid crystal display valve position displayThe area displays the percentage of the current valve position open, and the contents of the alarm area are cleared. If a certain item is abnormal during the self-test, the alarm area will always display the abnormal code of the item, and the control system will not accept anyWhat operation, waiting for processing.

After the actuator is powered on and initialized, the entire LCD screen displays the percentage of valve opening in large font. At the limit position of the valve position, the display of the valve opening is displayed in a graphical manner simulating the butterfly valve (seeBelow).

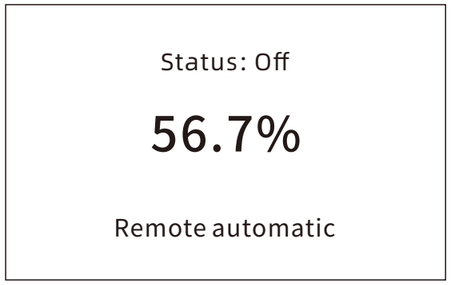

Valve opening display

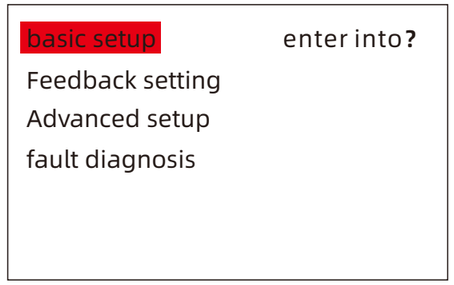

The main menu screen is displayed

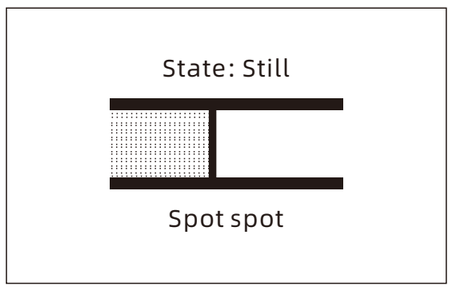

Turn-off display

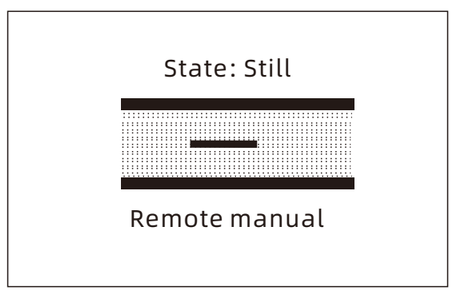

Open position display

3.4 Setting working parameters

Note 1: When performing menu operations, if the user does not press buttons within 1 minute, the display will automatically return to the non-setting screen. In addition, after each menu operation, the back key should be used straightWhen exiting the setting screen, the valve position opening percentage can be seen when the motor is rotating without the setting screen.

Note 2: After entering the menu operation, the preset item or the set value displayed for the first time is the stored value after the last setting. Users can use this feature to view the previous set value.

3.4.1 Entering the Menu

Put the mode button in the "Stop" position and press the 3 keys on the handheld setter to enter the tooling setting menu. Or put the mode button in the "Stop" position and the operation button in the "Open" position and hold it for 3SAbove, the control system enters the main menu screen of work setting.

Note: For the convenience of the following statement and display, the selected menu is indicated by "()". In the menu display of the LCD screen, the selected item is in the backdisplay mode (that is, white characters on black background).Indicates the position of the cursor; Items that are not selected are displayed in the usual way (black text on a white background).

3.4.2 Basic Settings Menu

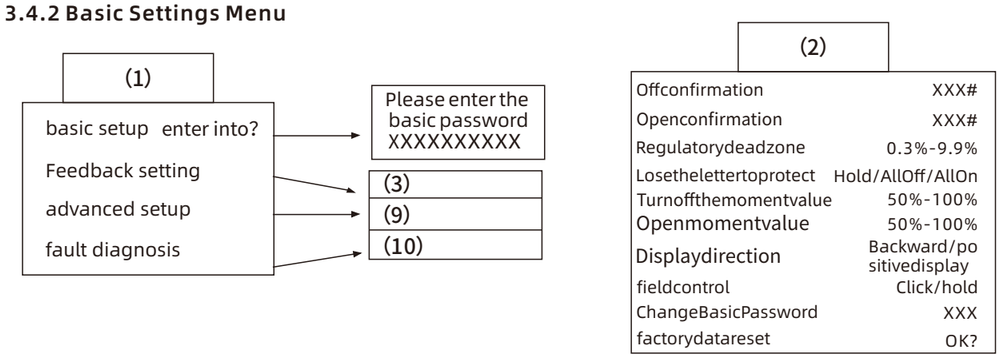

In the menu No. (1), select the required item with the "Up key" or "Down key", and then press the "Confirm key", the corresponding submenu will be displayed as shown in the figure above. Basic Settings (2) Menu number ChineseThere are 10 setting options (Note: For controllers with on-off torque actuators, there is no "off torque value", "on torque value" menu).

Note: Press the Confirm key to enter "Basic Settings", "Feedback Settings" and "Advanced Settings" respectively. The password interface will be automatically transferred to the following figure. If Basic Password,If the Feedback Setting password is set to 0, the password page is automatically skipped.

3.4.2.1 Confirming the Status

The sequence of limit setting is unlimited, the user can first set the off bit and then set the open bit, or you can first set the open bit and then set the off bit.

In menu (2), after selecting the "Off Confirm" item, the coded value (0 to 4095) for the current position of the absolute encoder output will be displayed on the right side of the line. The valve can be manually turned toClose the limit; You can also place the mode button in the "field" position, press the open/close key on the handheld setter or turn the valve electrically to the closing limit by operating the button. Press Confirm againAfter "key", the word "Saved" appears after the Off position confirmation on the LCD screen, indicating that the actuator has set the position as the off limit. If you press the Back key before pressing the Confirm key, this parameter is not setSet the limit and return to the previous menu.

3.4.2.2 Confirming the Open Bit

In the menu (2), after selecting the "On Confirm" item, the encoded value (0 to 4095) for the current position of the absolute encoder output will be displayed on the right side of the line. The valve can be manually turned toOpen the limit; Alternatively, the mode button can be placed in the "field" position, and the valve can be electrically turned to the open limit by pressing the open/close key on the handheld setter or by operating the button. Press Confirm againAfter "key", the word "Saved" appears after the "Off" position confirmation on the LCD screen flashes 2 times, indicating that the actuator has set the position as the open limit. If you press the "Back key" before pressing the "Confirm key"The opening limit is not set and returns to the previous menu.

Note 1: The encoder values 0 and 4095 are the minimum and maximum encoder values of the absolute encoder, respectively, and they coincide. Setting on and off limits during the processThe full stroke may pass through this coincidence point, but it shall be ensured that the full stroke does not exceed the range represented by the absolute encoder.

Note 2: If the limit of one end needs to be set after setting the limit of the other end, do not exit the original setting, and run to the limit of the other end, and then enter the setting of the other endConfirm, otherwise the actuator position cannot be remembered.

3.4.2.3 Adjusting the Dead Zone

Dead zone Meaning: This function is effective in remote automatic control mode. In this control mode, the actuator calculates the desired valve position value according to the control current, and then compares the value with the current valve positionIf the absolute value of the difference is greater than the dead zone value, the actuator starts to operate. Setting a proper dead zone prevents the actuator from oscillating near a given valve position.

In the menu (2), after selecting the "Adjust dead zone" item with the "Down key", the previous set value (0.3% ~ 9.9%) will be displayed on the right side of the row. Users can use the "plus" and "minus" keys to change the dead zoneBe worth. After selecting the desired dead zone value, save your changes with the Confirm key.

3.4.2.4 Actions for Dropping Letters

Lost letter: When the actuator works in the remote automatic control mode and the control current is less than 3.8m A, the actuator considers that the control signal is lost, referred to as lost letter.

Drop message action: The drop message action defines the position to which the actuator should run in the event of a dro p message. This item has three optional values: "Hold", "Full off" and "Full On". Among them, "positioning" refers to stayin g in place.

In menu (2), after selecting the Drop Action item with the "Down key", the previous Settings (" Hold "or" All off "or" All on ") will be displayed on the right side of the row. Use the "add" and "subtract" keys to select what you wantUse the "Confirm" key to save the changes made.

3.4.2.5 Turn off the torque threshold (this option is not available for torque switch type products)

In menu (2), after selecting the "Torque off value" item, the previous set value (percentage of rated torque) will be di splayed on the right side of the row. Use the "plus" and "minus" keys to set the value in the range of "50% ~ 100.Chan ge in the range of % ". Save the selected Settings with the Confirm key.

3.4.2.6 Opening the torque overload value (this option is not available for torque switch type products)

In menu No. (2), after selecting the "Open torque value" item, the previous set value (percentage of rated torque) will be displayed on the right side of the row. Use the "plus" and "minus" keys to set the value in the range of "50% ~ 100.Change in the range of % ". Save the selected Settings with the Confirm key.

3.4.2.7 Displaying Directions

In the menu (2), after selecting the "Display direction" item with the "Up key" or "Down key", the previous set value (" b ackward "or" positive ") will be displayed on the right side of the row. Use the "add" and "subtract" keys to selectTo save the select ed change, use the Confirmkey.

3.4.2.8 Field Control

In menu (2), after selecting the Field Control item, the previous set value (" Click "or" Hold ") will be displayed on the right side of the row. Use the "Add" and "subtract" keys to make the set value in "click" and "Hold"Switch between. Sa ve the selected Settings with the Confirm key.

3.4.2.9 Changing the Basic Password

In the menu (2), after selecting the "Change Basic Password" item with the "Up key" or "Down key", the previously set user password will be displayed on the right side of the line. Use the "plus" and "minus" keys to range from 0 to 255Set th e password value and use the "Confirm" key to save the changed value.

3.4.2.10 Restoring Factory Settings

If the parameters are set incorrectly during the menu setting process, this item can be used to restore the factory setting values e xcept for the "On", "Off" and "Off direction" parameters of the travel.

3.4.3 Feedback Settings

In the menu (1), select the item "Feedback setting" and press the "Confirm" button. If the user password is set to 0 (that is, no password), the menu (3) is entered. If the password is not 0, the feedback password is requiredGo to menu (3).

3.4.3.1 Low-end Fine-Tuning

In the menu (3), after selecting the item "low end micro", the actuator will send 4mA current; When the user thinks that the sent 4mA current is not accurate, the user can increase or decrease the output by "plus" and "minus" keysOutgoing curre nt; Save the Settings with the "Confirm" key

3.4.3.2 High-end Fine-tuning

In menu (3), after selecting "high-end fine-tuning" item, the actuator will send 20mA current; When the user thinks that th e sent 20mA current is not accurate, the user can increase or decrease the output by "plus" and "minus" keysOutgoing cur rent; Save the Settings with the "Confirm" key。

3.4.3.3 Contact Output

OUT1 to OUT5 switches are a group of non-holding output switches (whose switching status may change after power failure) used to indicate the status of the valve. It can be selected in the f ollowing status itemsWhether its switch is on or off when something happens. These states are: o ff in place, on in place, off over moment, on over moment, over moment, off, on, running, middleL ocation, remote location, site location.。

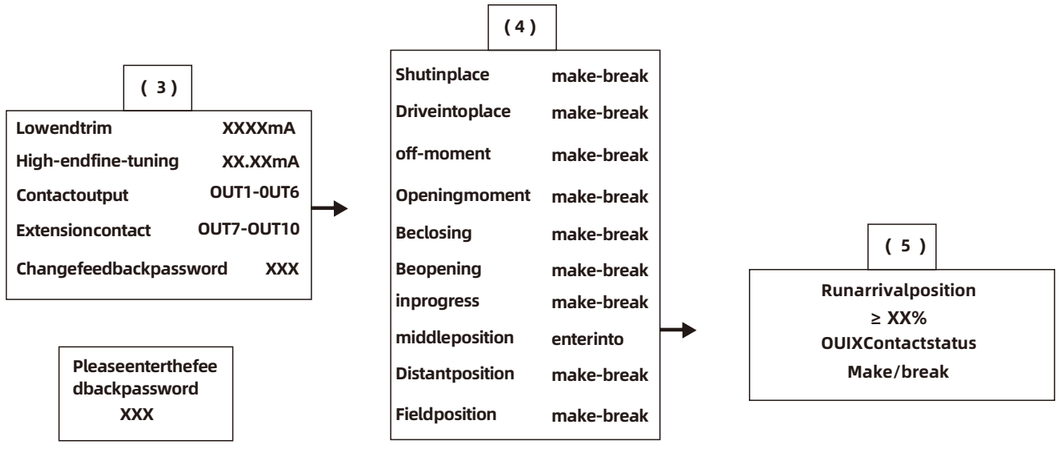

In the menu No. (3), use the "plus" or "minus" key to select the item "OUT1 to OUT5 switch" and press the "Confirm" key to d isplay the contents of the menu No. (4).

"Up Key" or "Down key" can select the required status item, use "Add" and "subtract" key to select whether the switch is on or off, when the requirements are met, use "Confirm" key to save the selected content.

If you select "Middle Position" and press "Confirm", the contents of menu (5) will be displayed on the screen. The user is as ked whether this is the specific middle position and whether the corresponding switch is closed or not after reaching the positionDisconnect. After you select ≥ XX% by pressing the Down key, the value previously set is displayed. The symbol ≥ means greater than and equal to the value. Use the "plus" and "minus" keys to select from 1% to 99%Select the desired va lue and use the "Confirm key" to save the selected content after meeting the requirements. Then use the "down key" to sel ect the last line of the screen, and use the "add" and "subtract" keys to select whether the switch is closed or disconnected .Use the "Confirm" key to save the selected content when the requirements are met.

In menu No. (3), if the OUT6 switch item is selected and the "Confirm key" is pressed, the screen displays the contents in m enu No. (17), which is used to set the contents contained in the alarm relay.

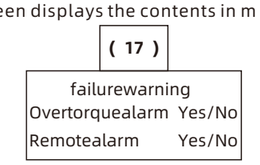

3.4.3.4 Expanding Contacts (Special customization required)

OUT7 to OUT10 switches are a group of holding output switches (when the power is off) Its switching state does not change) is used to indicate the state of the valve. It can be s elected below

Whether the switch is on or off when an item in the state item occurs. These states are:Close in place, open in place, close o ver moment, open over moment,Over moment, closing, on, running, intermediate position, distant position, field position.

3.4.3.5 Changing the Feedback Password

In the menu (3), after selecting the "Change Feedback Basic Password" item with the "Move up key" or "Move Down key", the previously set user password will be displayed on the right side of the line. Use the "plus" and "minus" keys to range from 0 to 255Range Set the password value and use the "confirm" key to save the changed value.

3.4.4 Advanced Settings

In the menu (1), select "Advanced Options" and press "Confirm" to enter the menu (9). As shown in the following picture. Enter the correct password in the menu (9) and press "Confirm" to enter the menu (6). You can perform advanced Settings fo r the actuator

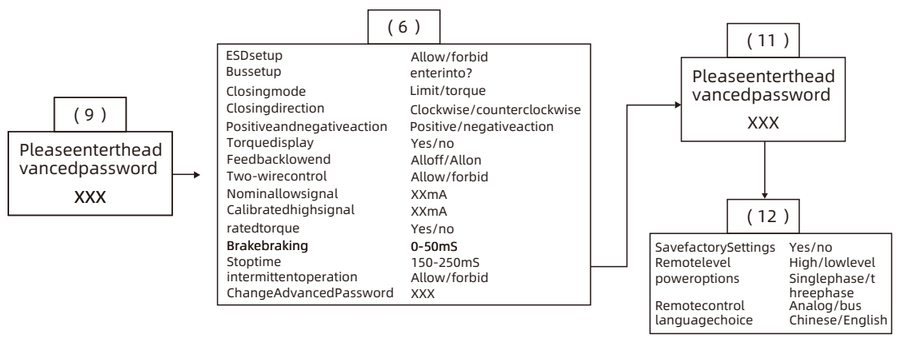

★3.4.4.1ESD Settings

In menu (6), use the "Up" and "Down" keys to select "ESD Settings"

After the entry, the right side of the line will display the previous set value (" Forbidden "or" allowed ") indicated by "Forbidden".

Disable ESD control. Allow indicates that ESD control is allowed. Use the "add " and "subtract" keys to select the desired value.

Save the selected changes with the Confirm key. Screen display after selecting Allow and pressing "Confirm" (14)The contents of the menu.

(16)

ESD moving position	All off/All On/No
ESD active level	High/Low
ESD overheat	Yes/no
ESD override stop	Yes/no
ESD transcendental interrupt	Yes/no
ESD overshoots the moment	Yes/no

★ 3.4.4.1.1ESD Move

ESD: refers to the action performed by the actuator in emergency situations (that is, when the actuator detects an effectiv e ESD signal on the ESD control signal terminal). There are three ESD actions: "full on", "full off" and"Do not move."

In menu (14), after selecting the ESD Move item with the "Move up" or "Move Down" key, the previous Settings (" All Off "or" All on "or" Disable ") will be displayed on the right side of the line. Use "plus" and "minus.Select the desired value and use the "Confirm" key to save the set changes.

★ 3.4.4.1.2ESD effective level

The input signal on the actuator ESD control signal terminal consists of two level values: the non-voltage signal is called l ow level, and the voltage signal is called high level.

In menu (14), after selecting the ESD Active Level item with the Down key, the previous set value (" Low "or" High ") will be displayed on the right side of the line. Use the "add" and "subtract" keys to select what you wantTo save the selected chan ges with the Confirm key.

★ 3.4.4.1.3ESD Overheats

ESD over overheating means that even if there is a "motor overheating" alarm to perform ESD control action, otherwise st op performing ESD control action.

In menu (14), after selecting the ESD Beyond Overheating item with the Up or Down key, the previous Settings (Yes or No) will be displayed on the right side of the line. Use the "add" and "subtract" keys to selectTo save the selected change, use the Confirm key.

★ 3.4.4.1.4 ESD Stops in Advance

ESD overstop means that the ESD control action should be performed even if the mode button is in the "stop" position, oth erwise the ESD control action should be stopped.

In menu (14), after selecting the ESD Override Stop item with the Up or Down key, the previous Settings (Yes or No) will be displayed on the right side of the line. Use the "add" and "subtract" keys to selectTo save the selected change, use the Con firm key.

★ 3.4.4.1.5 ESD Beyond Interruption (Need to be customized)

ESD beyond interruption means that the ESD control action should be performed even if the actuator is working in "interm ittent operation" mode, otherwise the ESD control action should be stopped.

In menu No. (14), after selecting the ESD Beyond Interruption item with the Up or Down key, the previous Settings (Yes or N o) will be displayed on the right side of the line. Use the "add" and "subtract" keys to selectTo save the selected change, us e the Confirm key.

★ 3.4.4.1.6 ESD Overstep (need to be customized)

ESD beyond the moment refers to the execution of ESD control action even if the actuator is in the moment state, otherwise st op the execution of ESD control action.

In menu No. (14), after selecting the ESD Overshoot item with the Move Up key or Move Down key, the previous setting valu e (Yes or No) will be displayed on the right side of the line. Use the "add" and "subtract" keys to selectTo save the selected change, use the Confirm key.

★ 3.4.4.2 Bus Settings

In the menu (6), after selecting the item "Bus Settings" with the "Move up key" and "move Down key", the item "Enter" will be displayed on the right side of the line. PressThe Confir m key screen displays the contents of menu (A).

(A)

I card address	0
II card address	1
Baud rate	9.6KB/S
parity check	None, Odd, or even
Bus ESD	Forbid/permit
Loss time	10s

- **I Card address:** Representing the address of the bus, the set value (default is "1") will be displayed on the right side of the line. Use the "plus" and "minus" keysSelect the desired value and save the selected change with the Confirm key
- **II card address:** Represents the address of the bus, currently standby (default is 0)
- **Baud rate:** The right side of the line will display the set value (default is 9.6KB/S), use the "plus" and "minus" keys to select the desired value, and use the "confirm" key to save the selected changes.
- **parity check:** The right side of the line will display the set value (default is "none"), use the "Add" and "subtract" key s to select the desired value, and use the "confirm" key to save the selected change
- **Bus ESD:** It means that ESD control actions should also be performed in the state of the bus. The right side of the line will display the set value (default is "Disable"), use the "plus" and "minus" keys to select the desiredTo save the selected changes with the Confirm key.
- **Loss time:** A command that the actuator did not receive from the bus during the set time. The right side of the line w ill display the set value (default is "10S"), select with the "add" and "subtract" keysThe desired value, sav e the selected change with the Confirm key.

★3.4.4.3 Stopping Mode

In menu No. (6), after selecting the "closing mode" item, the previous setting value (" limit "or" torque ") will be displayed on t he right side of the line, and "limit" indicates that the actuator will act after receiving the shutdown signalStop the action to th e closing limit, "torque" means that the actuator does not stop the action after receiving the closing signal to the closing limit until the moment stops working to ensure that the valve is tightly closed. With "plus",The "Minus" key switches the set value b etween "limit" and "torque". Save the selected Settings with the Confirm key.

★3.4.4.4 Disabling Direction

In the menu (6), after selecting the "off direction" item, the previous setting value (" clockwise "or" counterclockwise ") w ill be displayed on the right side of the line, and pressing the "back key" will return to the previous menu, noWill change t he previous Settings. Users can use this feature to query the previous set value (similar to the following, not repeated) w ith the "plus", "minus" key can make the set value in the "clockwise" and "counterclockwise"Switch between. Save the sel ected Settings with the Confirm key. (Note: The stroke must be reset after the actuator changes the closing direction)

★3.4.4.5 Positive and Negative Effects

Positive effect: control the low end of the current corresponding to the full closure of the valve; The high end of the contro l current corresponds to the full opening of the valve.

Reaction: the low end of the control current corresponds to the full opening of the valve; The high end of the control curre nt corresponds to the full closure of the valve.

In the menu (6), after selecting the "positive and negative action" item, the previous set value (" positive action "or" negat ive action ") will be displayed on the right side of the line. Use the "plus" and "minus" keys to select the required set value and use "Confirm"Key "saves the changes made.

★3.4.4.6 Torque display (This option is not available for torque switch type products)

In menu (6), after the Torque Display item is selected, the previous set value (" Yes "or" No ") will be displayed on the righ t side of the row. If "Yes" is selected, the actuator is operated during normal electric operation (notSetting screen), the lo wer part of the screen will display the current torque (rated torque percentage) in real time. Use the "Add" and "Subtract" keys to select the desired Settings, and use the "Confirm" key to save the selected changes.

★3.4.4.7 Feedback Low-end

In the menu (6), after selecting the "feedback low" item, the previous set value (" full on "or" full off ") will be displayed o n the right side of the line, and the "plus" and "minus" keys can make the set value in "full on" and "full off""Switch betwe en. Save the selected Settings with the Confirm key.

★3.4.4.8 Two-Wire Control

In the menu (6), use the "Up key" or "Down key" to select the "two-line control" item and press the "Add" and "subtract" ke ys to select "Prohibit" or "Allow" two-line control.

Two-wire control refers to the working mode when the actuator receives the remote two-wire electric operation."There is a letter on, no letter off" means that when there is a voltage s ignal on the line between the central control room and the actuator, the actuator will op en the operation;The actuator is closed when there is no voltage signal on the line. "The re is a letter close, no letter open" refers to the central control room and executionWhen there is a voltage signal on the wire of the actuator, the actuator is closed. When there is no voltage signal on the line, the actuator is carried outOpen operation. If the two-wire c ontrol is selected as Disable, the wire control is invalid. In menu (6), use "Move Up"Or sel ect the Down key

(13)

Two-wire setup

Open by mail，ungateway

A letter closes, and no letter opens

★3.4.4.9 Current calibration

When the 4mA ~ 20mA current sent by the user to the actuator is different from the previous calibration value of the actua tor, this function can be used to re-calibrate the current sent by the user, so that the actuator and the userThe 4mA ~ 20m A current sending devices have the same measurement standard to improve the accuracy of actuator control.

For the convenience of description, 4mA is defined as the low end of the signal (referred to as low signal), and 20mA is define d as the high end of the signal (referred to as high signal).

Calibrating low signal: in the menu (6), after selecting the item "calibrating low signal" with the "Down key", the right sid e of the line will display the control current value (mA) collected by the actuator; At this point the user can give the actua torSend the low end signal to control the current, and wait until the current is stable and press the "confirm" key to save t he collected current value.

Calibrating high signal: in the menu (6), after selecting the item "Calibrating high signal" with the "Down key", the right s ide of the line will display the control current value (mA) collected by the actuator; At this point the user can give the actu atorSend a high-end signal to control the current, and wait until the current is stable and press the "confirm" key to save the collected current value.

At any time, the user can use the control current calibration menu to query the current value sent by the user, but before t he control current signal is not specified, the query value is not accurate.

★3.4.4.10 Brake Braking (need to be customized)

Brake brake refers to a brief action after the actuator moves to the target position (three-phase brief reverse rotation to offse t the inertia of the actuator movement; Single phase brief simultaneous braking to consume executionThe inertia of the dev ice movement) to achieve the purpose of improving the control accuracy.

In the menu (6), after selecting the "Brake brake" item, the right side of the line will display the previously set actuator brake brake ti me value (mS), and use the "confirm" key to save the changes.

★3.4.4.11 Stop Time (Need to be customized)

Stop time refers to a short action after the actuator moves to the target position (three-phase short reverse rotation to offset the inertia of the actuator movement; Single phase briefly brakes simultaneously to consume the gripThe inertia of the actu ator movement) to achieve the purpose of improving the control accuracy.

In the menu (6), after selecting the "brake braking" item, the right side of the line will display the previously set actuator bra ke braking time value (mS), and use "plus" and "minus" to select the time rangeThe required value (0mS indicates no-brake braking, 0-50ms for three-phase, 0-150ms for single-phase), use the "confirm" key to save the changes made.

★3.4.4.12 Stop Time (Need to be customized)

Stop time means that the actuator stops for a certain time before braking.
In the menu (6), after selecting the "stop time" item with the "Down key", the value of the actuator brake stop time (mS) previously set will be displayed on the right side of the line, and the time can be set with "add" and "subtract"Select the required value (150 to 250Ms for three-phase and 0 to 150 ms for single-phase) and use the Confirm key to save the change.

★3.4.4.13 Interrupted Running (Need to be Customized)

Intermittent operation means that the operation process of the actuator is not continuous, but stop-and-go. This operation is set for those requiring clearance action during valve opening or closing. betweenOff operation allows the actuator to perform the off/on action in a pulsating manner, effectively increasing the travel time to prevent hydraulic shock and fluid surge.
If the parameter is set to "No", the operation process of the actuator is a normal continuous operation process. If you select "Yes", the (E) into (E) menu is displayed, and the user can run intermittently according to the needSets the subitems in the (E) menu.

(E)

Drive to start position	0~100%
Open to final position	0~100%
Open stroke	2~100%
Drive to stop	1~255S
Close to the beginning position	0~100%
Close to the final position	0~100%
Off stroke	2~100%
Turn off to stop	1~255s

★3.4.4.13.1 Driving to the Start Position

The open start position means that the actuator opens the "break" during the operation in the open directionThe start position of "Run" use the "add" and "subtract" keys to select the desired value within the range of opening values from 0 to 100%Use the Confirm key to save your changes.

★3.4.4.13.2 Driving to the End Position

The open end position means that the actuator terminates "intermittent operation" during the open direction operation.The end position of. Use the "plus" and "minus" keys to select in the opening value range from 0 to 100%Select the desired value (the open end bit must be greater than the open beginning bit) and use the "confirm" keySave the changes made.

★3.4.4.13.3 On/Off direction drive

The on/off stroke refers to the stroke value that the actuator needs to run during each intermittent operation during the "intermittent operation" operation in the open direction (the set values of the ON and off strokes can be different).Use the "plus" and "minus" keys to select the desired value in the opening value range of 2 to 100%, and use the "confirm" key to save the change.

★3.4.4.13.4 Switch On/Off to Stop

The on/off shutdown refers to the stroke value that the actuator needs to run during each intermittent shutdown during the "intermittent operation" operation in the open direction (the setting value of the on and off shutdown can be different).Use the "plus" and "minus" keys to select the desired value in the opening value range from 1 to 100%, and use the "confirm" key to save the change.

★3.4.4.12.5 Gateway Start Bit

The turn-off starting position refers to the starting position where the actuator starts "intermittent operation" during the turn-off running. Use the "plus" and "minus" keys to select the desired value within the opening value range of 2 ~ 100% "Key" saves the changes.

★3.4.4.13.6 Turning Off the Direction End Bit

The off end position refers to the end position where the actuator terminates "intermittent operation" during the off direction operation. Use the "add" and "subtract" keys to select the desired value in the range of opening values from 0 to 100% (switchThe ending bit must be less than the beginning of the relation), and use the "confirm" key to save the changes made.

★3.4.4.14 Calibration torque (This option is not available for torque switch type products)

Calibration torque refers to the reading of the current torque when the motor is running such as selecting "Yes" to enter the (A) menu. This sensor reading can be either inTorque calibration is automatically learned, and manual input is also available.Calibration torque refers to the reading of the current torque when the motor is running, such as selecting "Yes" to enter the (A) menu. This sensor reading can be either inTorque calibration is automatically learned, and manual input is also available.

(A)

Open torque low-end sensor reading	XXXX
Open torque high-end sensor reading	XXXX
Turn off torque low-end sensor reading	XXXX
Torque off high-end sensor reading	XXXX

★3.4.4.15 Interface for Changing the Advanced Password

In the menu (6), after selecting the "Change Advanced Password" item with the "Down key", the previously set user password will be displayed on the right side of the line. Use the "plus" and "minus" keys to set in the range of 0 ~ 255Password value. Use the Confirm key to save the changed value.

★3.4.4.16 Interface for Saving Factory Settings

In the menu No. (6), select the item "Factory Settings" with the "Down key", enter the menu No. (12) after entering the factory password, and change the "Yes" after "Save factory Settings" with the "plus" and "minus" keys.Or "No", if you select "Yes", then press the "Confirm" key; If you do not want to save the file, select No or press the Back key to exit.
Menu No. (12) also includes the "Remote hold" level selection, after selecting "Remote Hold" with the "Down key", its right side will display the last set level, "high level" or "low level", available"Add", "subtract" key switch, use the "confirm" key to save.

★3.4.5 Fault Diagnosis Street

In the menu (1), select the item "Troubleshooting" and press "Confirm" to enter the menu (10)。

(10)

Way button position, stop/spot/distance
Operating button position On/off/vacant
Remote open signal Yes/no
Remote off signal Yes/no
Remote hold signal yes/no
Remote automatic signal Yes/no
Remote bus signal Yes/no

★3.4.5.1 Mode Button Location

In the (10) menu, after selecting the "Mode button location" item with the "Up key" or "Down key", the previous "mode button" will be displayed on the right side of the lineIn the location.
Row query:
When the mode knob is in the "Stop" position, (10) "Stop" displayed on the right of the "mode button position" item in the menu is normal, otherwise it is abnormal;
When the mode knob is in the "field" position, (10) "Field" displayed on the right of the "mode button position" item in the menu is normal, otherwise it is abnormal;
When the mode knob is in the "far" position, (10) "Far" displayed on the right of the "mode button position" item in the menu is normal, otherwise it is abnormal;
Note "In this item, the" back "operation with the mode knob does not work.

★3.4.5.2 Position of the Operation Button

In the (10) menu, after selecting the "Operating button position" item with the "Move Up key" or "Move Down key", the position of the previous "Mode button" will be displayed on the right side of the line. The user can determine the position of the mode buttonMake a query:
When the operation knob is in the "Open" position, (10) it is normal that "Open" is displayed on the right of the "operation knob position" item in the menu, otherwise it is abnormal;
When the operation knob is in the "off" position, (10) it is normal that "off" is displayed on the right of the "operation knob position" item in the menu, otherwise it is abnormal;
When the operation knob is in the position of "empty", (10) the menu of "operation knob position" to the right of the display of "empty" is normal, otherwise it is abnormal;
Note "In this item, when you use the operation knob to" move down "or query the" Off "position, the screen will first display" Off "for one second and then move to the nextItem.

★3.4.5.3 Turn on Signal in the Distance

In menu (10), after selecting the item "Remote open signal", the right side of the line will show whether the signal is "yes" or "no". The user can then know the status of the signal.

★3.4.5.4 Remote Close Signal

In menu (10), after selecting the item "Remote off signal", the right side of the line will show whether the signal is "yes" or "no". The user can then know the status of the signal.

★3.4.5.5 Maintaining Signal in the Distance

In the menu (10), after selecting the item "remote hold signal", the right side of the line will show whether the signal is "yes" or "no". The user can then know the status of the signal.

★3.4.5.6 Remote Automatic Signal

In menu (10), after selecting the item "Remote Automatic Signal", the right side of the line will show whether the signal is "yes" or "no". The user can then know the status of the signal.

★3.4.5.7 Remote ESD Signal

In menu (10), after selecting the item "Remote ESD signal", the right side of the line will display whether the signal is "yes" or "no" according to the valid signal in ESD Settings. The user knows the message from thisThe status of No.

★3.4.5.8 Controlling the Current

In the menu (10), after selecting the "Control current" item, the control current value (mA) collected by the actuator will be displayed on the right side of the line. The user can then know whether the signal is normal.

★3.5 Factory Default Settings (if the user does not have special Settings)

Regulatory dead zone: 1.5%
Drop message action: hold position
Turn off the moment value： 80%
Open moment value： 80%
Torque display: No
Display direction: positive
Field control: point action
OUT1 switch: Turn off to close
OUT2 switch: Open in position to close
OUT3 switch: Turn off the moment to close
OUT4 switch: open over torque closed
OUT5 switch: Close the remote
OUT6 switch: fault alarm
(Includes over torque, not far distance
ESD Settings: Disable
Bus Settings: Enter
Closing mode: Limit
Closing direction: clockwise
Feedback low: all
Positive and negative action: positive action
Two-wire control: Disable
Brake Brake: 0mS
Stop time: 150mS
Intermittent operation: Disable
Rated torque: None
Basic cipher： 0
feedback cipher： 0

alarm information

1、When the alarm area shows "turn-off overtorque", it means that during the valve closing process, the torque value borne by the actuator exceeds the rated value, at this time, the actuator will stop the motor rotation, and establish a sign to prohibit the turn-offAction. Move a short distance in the open direction or re-power on to clear the closing valve overtorque sign; In the menu, if the over-moment alarm is selected as "include", the "NC" end of the alarm relay and "COM"The end is closed;

2、When the alarm area shows "open overtorque", it means that during the valve opening process, the torque value borne by the actuator exceeds the rated value, at this time, the actuator will stop the motor rotation, and establish a sign to prohibit the openingAction. Move a short distance in the direction of closing or re-power on to clear the valve overtorque sign; In the menu, if the over-moment alarm is selected as "include", the "NC" end of the alarm relay and "COM"End closure;

3、When the alarm area shows "power shortage phase", it means that the actuator detects power shortage phase, at this time the actuator will stop the motor rotation, and make the "NC" end and "COM" end of the alarm relay close;

4、When "Signal loss" is displayed in the alarm area, it means that the 4mA ~ 20mA control signal of the input actuator has been lost, and the actuator will be carried out according to the setting value of "letter loss action" in the "Working Parameter setting"The "NC" end and "COM" end of the action alarm relay are closed;

5、When the alarm area shows "abnormal valve position", it means that the change of valve position cannot be detected during the actuator rotation (may be the encoder plug-in is not plugged in or the encoder has a problem or the motor is blocked)The actuator will stop the motor from rotating and make the "NC" end and "COM" end of the relay close;

Note: The motor is blocked. When the actuator is operating on the switch, the valve position change cannot be detected within 15-20s clock, and the actuator will stop the motor rotation at the same time. This alarm indicates the valveMay be stuck or the actuator output torque does not conform to the assigned valve.

6、When the alarm area shows "motor overheating", it means that the motor temperature of the actuator is too high, and the actuator will stop the motor rotation. Attempt other electric operation of the actuator, either in situOr remote operation is invalid, and make the relay "NC" end and "COM" end closed;

Note: When there is NO alarm, the "no" end and "COM" end of the alarm relay are closed; The NC terminal is disconnected from the COM terminal.

BY380V3J20240517

BY-FZTX Intelligent Wiring Diagram
(380V)(AC Contactor drive)

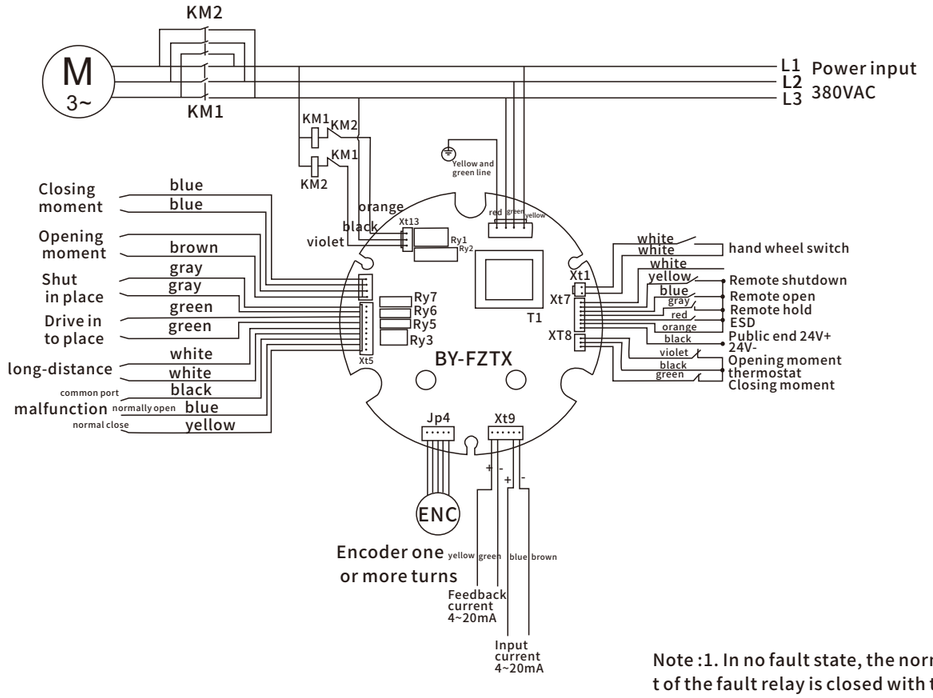

Note :1. In no fault state, the normal start of the fault relay is closed with the common end; The normally closed end is disconnected from the common end.