UNIVERSALS BE-BS45 LIMITS SWITCH BOXES

FEATURES

The universals aluminium housing BE/BS45 switch boxes are intended for quarter-turn pneumatic actuators equipment. It allows an easy and direct visualization of the position of the and valve and feedback information to the control. With a compact and economic construction, it can be installed outdoors. This switch boxes are provided with a NAMUR universal fixation system. BE/BS45 enclosures can be equipped with multiple switches and sensors (see below). The notched cams can be manually adjusted with great accuracy, and are insensitive to vibrations.

AVAILABLE MODELS

BE45 : model mechanical switches IP66/67
BS45 : model proximity sensors IP66/67

On request

LIMITS OF USE

Ambiant temperature	-20°C / +80°C
IP Rating	IP 66/67



MECHANICAL CONNECTION

Axis dimension	According to VDI/VDE 3845
Stainless steel brackets for fixation on the actuator	**NAMUR 1** : 80x30 **NAMUR 2** : 80x30 **NAMUR 3** : 130x30 **Height of axis** : 20, 30, 40, 50

ELECTRICAL CONNECTION

Standard Cable Entries	2 x M20 x 1,5
Gland (included)	2 x M20 x 1,5
Cable entries (option)	2 x 1/2" NPT

BE/BS45 SWITCH DETAILS

Réf.	Switch	Features
BE45	2 mechanical switches SPDT silver	Max 3A-250 Vac Max 5A-125 Vac Max 3A-30 Vcc
BS45	2 proximity sensors 3 wires	PNP 10 - 30 Vdc P+F NBB2 V3 E2

Information given as an indication only, and subject to possible modifications

UNIVERSALS BE-BS45 LIMITS SWITCH BOXES

CONSTRUCTION

No.	Name	Materials
1	compact housing	Coated aluminium
2	Lid (dome)	UV resisting polycarbonate
3	3D Indicator (OPEN/CLOSED)	ABS
4	Shaft	Stainless steel
5	Cam	ABS
6	Integrated PCB with terminal strip	ABS
7	Gasket	NBR
8	Universal bracket	Stainless steel
	Weight (kg)	0,74

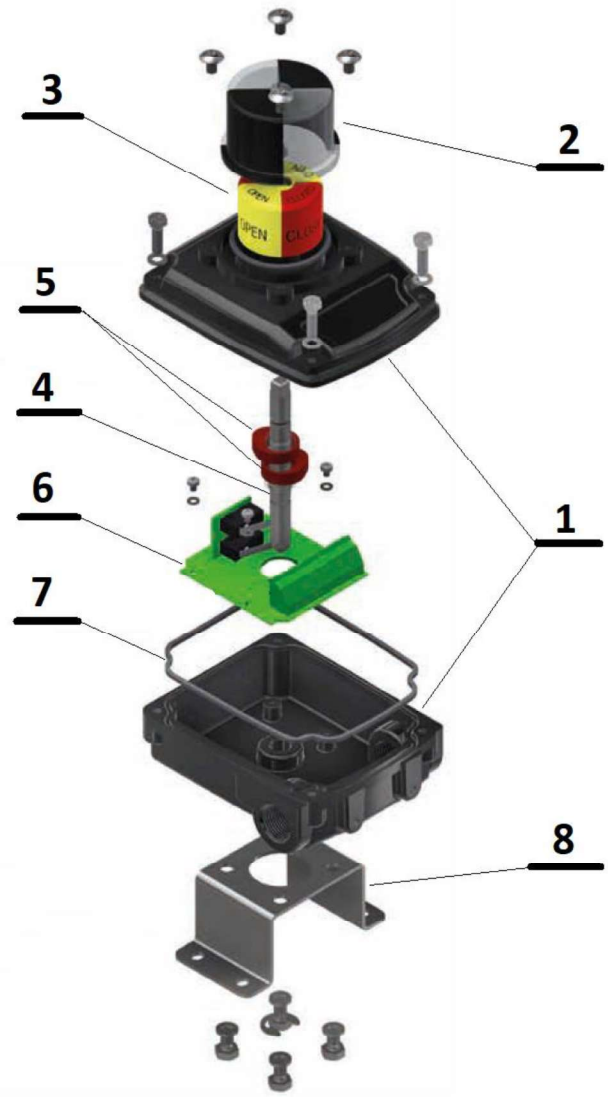

Information given as an indication only, and subject to possible modifications

UNIVERSALS BE-BS45 LIMITS SWITCH BOXES

DIMENSIONS (mm)

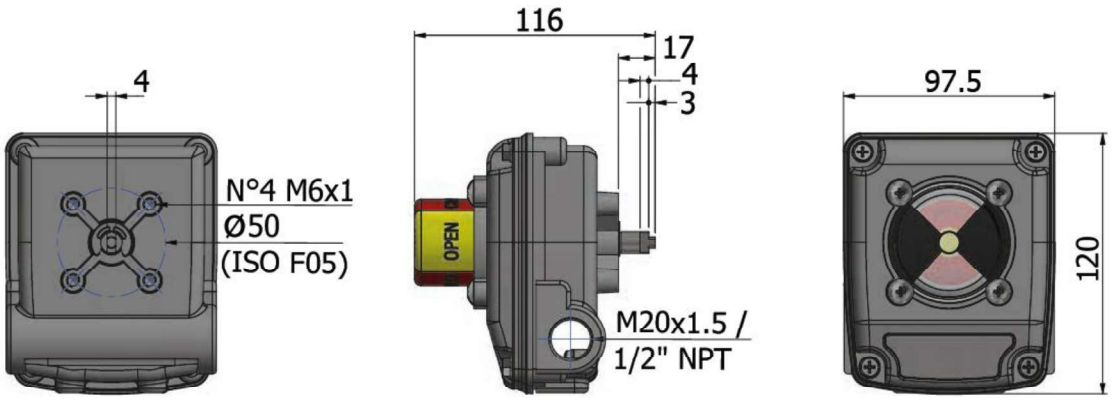

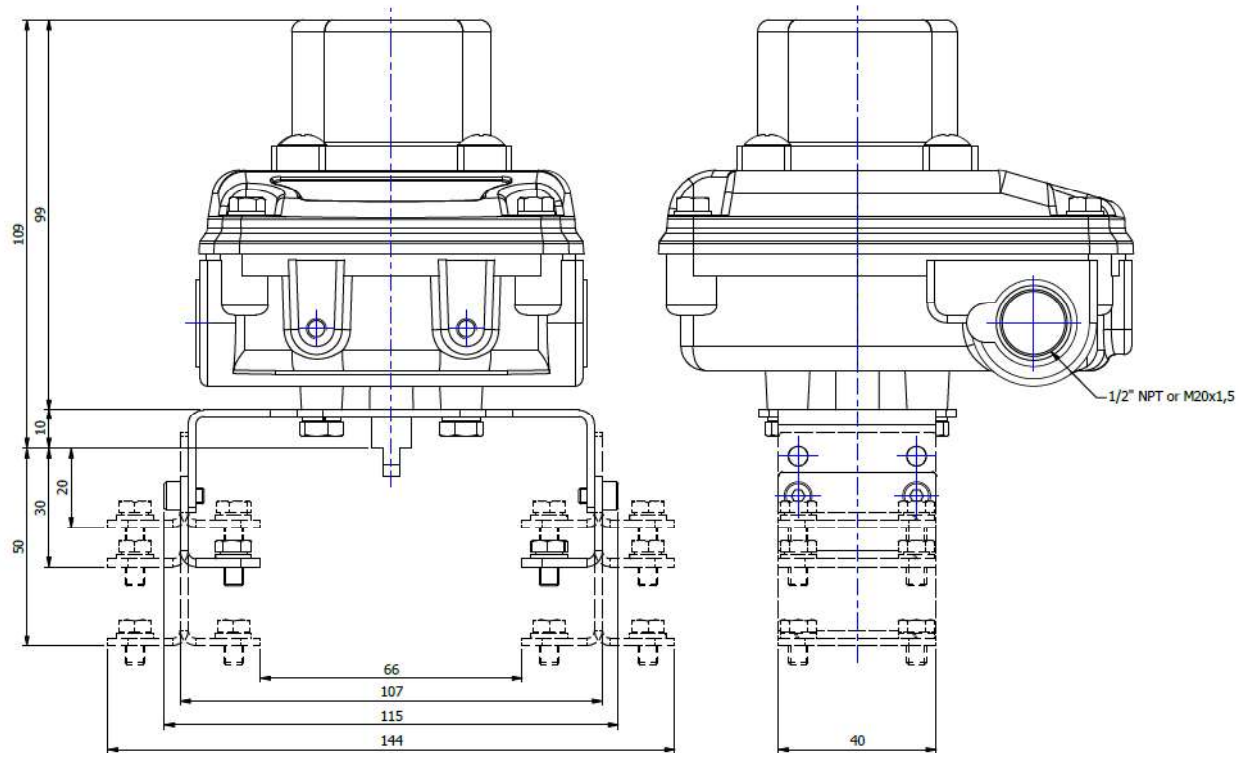

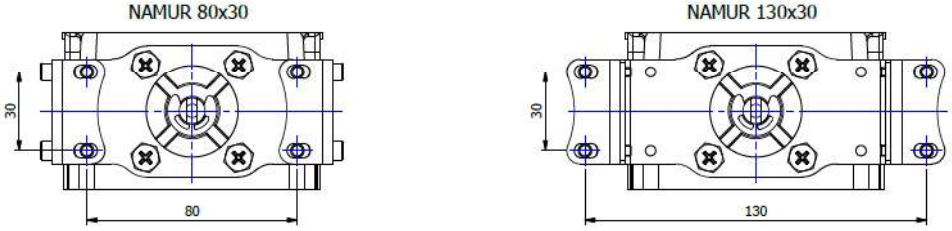

Information given as an indication only, and subject to possible modifications

UNIVERSALS BE-BS45 LIMITS SWITCH BOXES

WIRING DIAGRAMS

A) Two SPDT micro switches, mechanical or magnetic

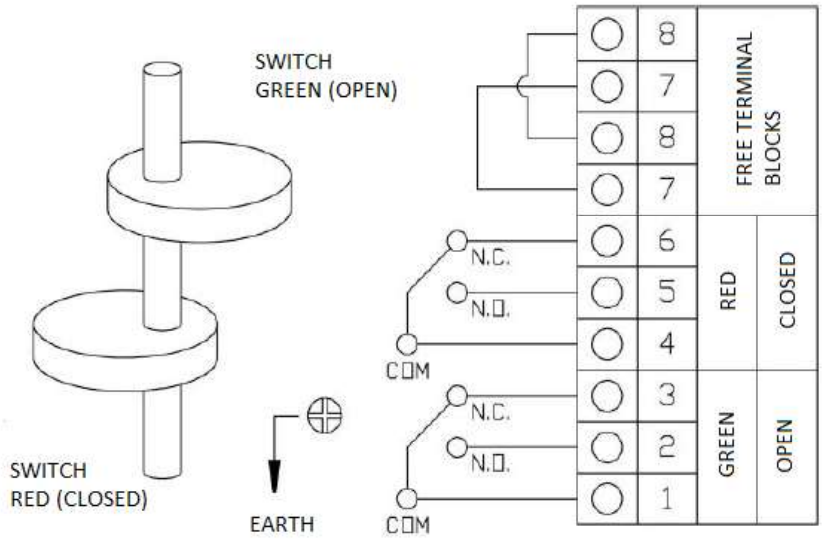

B) 3-wire cubic inductive/proximity sensors

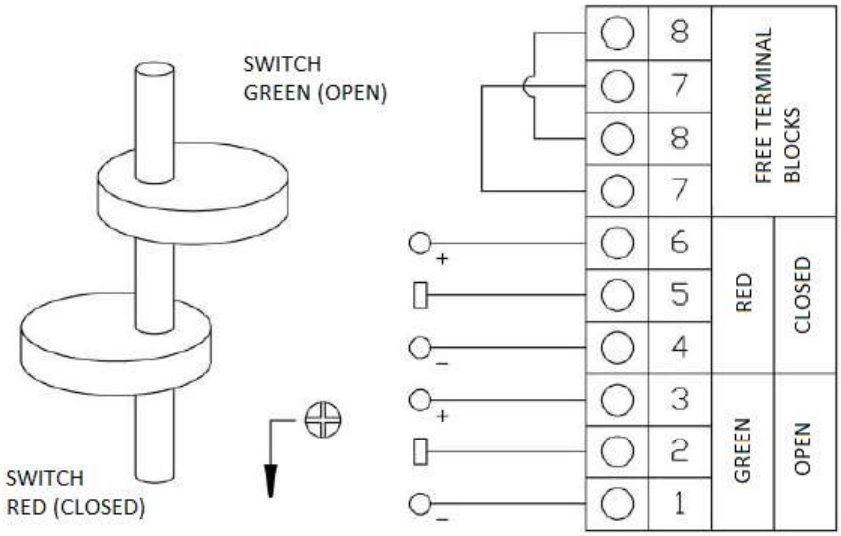

Information given as an indication only, and subject to possible modifications