The REMOTE CONTROL® Range

Top Quality Valve Actuators
Made in Sweden

RC 200-DA/SR Technical Data



RC200-DA



RC200-SR

All Remote Control actuators are

- **100% leak and functional tested**
- **Marked according to international standards**
- **Delivered with instructions in all EU languages**

RC 200 designs

Temperature range

Standard: -20 °C to +80 °C / -5 °F to +175 °F
Low temp: -40 °C to +60 °C / -40 °F to +140 °F
High temp: 0 °C to +150 °C /+30 °F to +300 °F

RC 200 meet standards

Solenoid valve connection: NAMUR
Fitting accessories: VDI/VDE 3845, NAMUR
Fitting to valve: Hole pattern,centering ring ISO 5211, DIN 3337, NAMUR
Stardrive shaft: ISO 5211 with 90° ☐ and DIN 79 with 45° ◇ and NAMUR

RC200 are CE-marked

According to PED and ATEX.

Quick acting RC 200 actuators

For quick operating times.

Pressure ranges

RC 200-DA: 2-10 bar / 30-145 psi
RC 200-SR: 2-10 bar / 30-145 psi

Extra corrosion protection

RCT hard anodised actuators
Epoxy finished
Offshore or other finish to meet customer specifications.
Stainless screws and drive shaft (standard for RC 210-260)

Operating medium

Air, inert gases (non-dangerous fluids, group 2 according to directive PED 97/23/EC)
RC 200 actuators also available for Water or oil hydraulics: 2-10 bar / 30-145 psi

www.remotecontrol.se

Rotork Sweden AB
Tel +46 (0)23 587 00
Fax +46 (0)23 587 45
www.remotecontrol.se
falun.info@rotork.com

Measures in mm.

HC3= Extra hole pattern for RC270 and RC280
HC2= Outer hole pattern
HC1= Inner hole pattern

Fig. 1

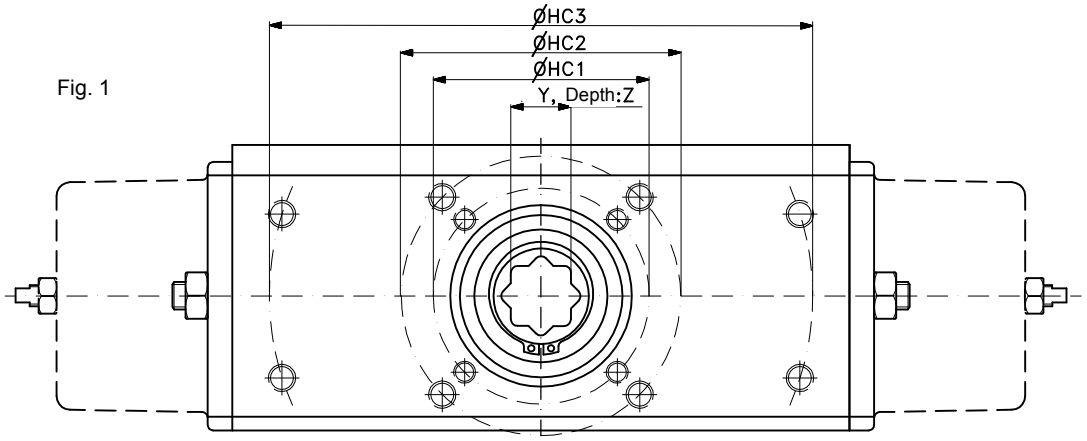

Fig. 2

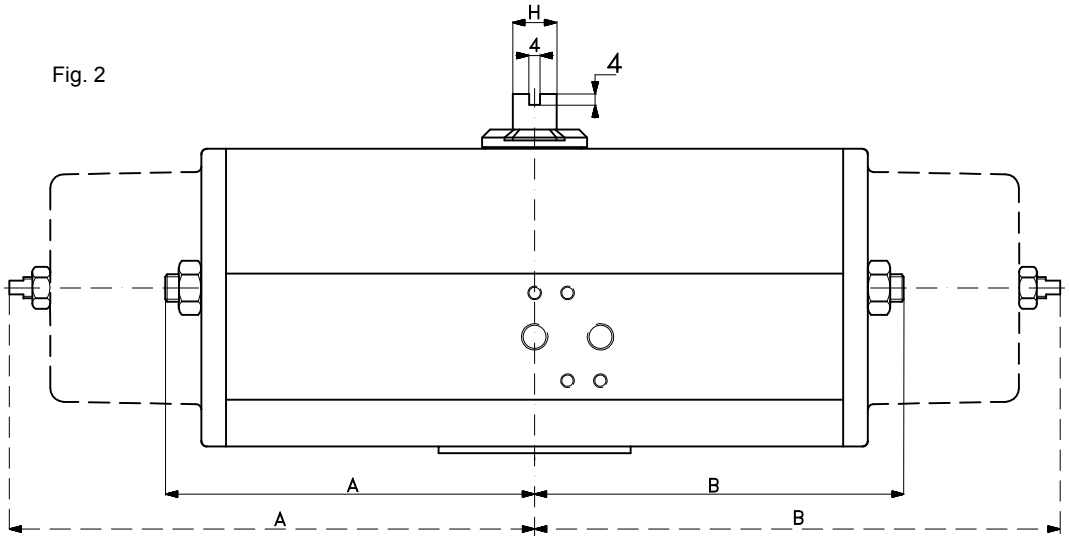

Fig. 3

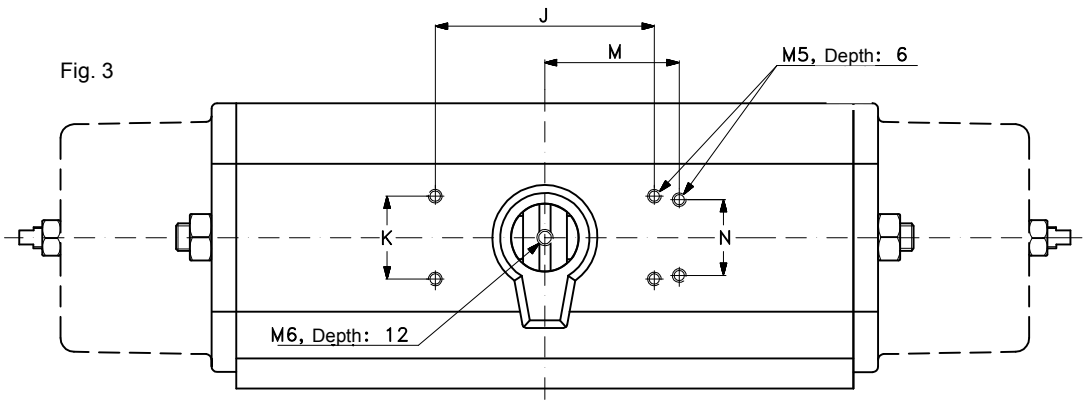

M and N= Extra mounting holes for RC210

Rotork Sweden AB
Tel +46 (0)23 587 00
Fax +46 (0)23 587 45
www.remotecontrol.se
falun.info@rotork.com

RC210 - 240

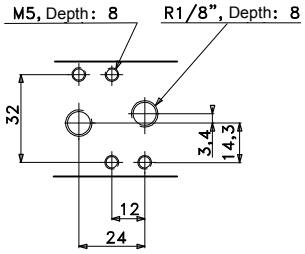

Hole pattern for solenoid valves acc. to VDI/VDE 3845, NAMUR

RC250 - 280

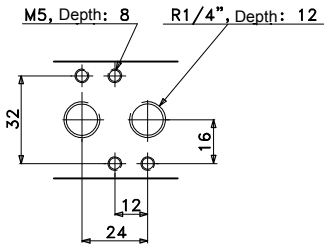

RC210–265

Fig. 4

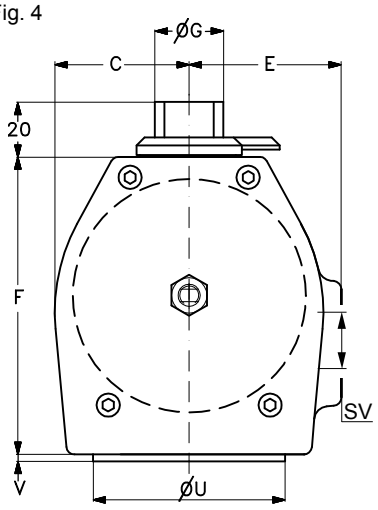

SV= Mounting solenoid valves acc. to VDI/VDE 3845, NAMUR

U+V= Guide ring acc. to DIN 3337

RC270–280

Fig. 4a

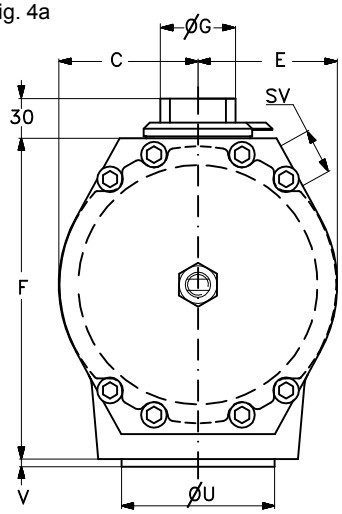

Measures in mm.

Dimensions RC200 Standard design

Actuator Standard	Fig. 1					Fig. 2					Fig. 3				Fig 4 / 4a								Weight kg	
	Hole circle 1	Hole circle 2	Hole pattern 3	Shaft		DA Length		SR Length		NV	Hole pattern 1		Hole pattern 2		Width		Height	Ø	Guide ring					
	HC 1	HC 2	HC 3	Square Y**	Depth Z	A	B	A	B	H	J	K	M	N	C	E	F	G	U*	V	DA	SR
RC 210-DA/SR	F05	F07	-	14	19	45	98	45	150	10	35,4	35,4	40	30	32	41	75	16	35	2	1,2	1,5
RC 220-DA/SR						98		150			80	30	-	-							1,6	2,2
RC 230-DA/SR	F07	F10	-	17	30	65	135	65	200	16	80	30	-	-	49	55	110	25	55	3	3,5	4,2
RC 240-DA/SR				22		135		200											70		4,9	7,0
RC 250-DA/SR	F10	F12	-	22	37	90	190	90	285	22	80	30	-	-	69	75	155	35	70	3	9,4	12,4
RC 260-DA/SR				27		190		285											85		12,5	18,5
RC 265-DA/SR	F12	-	-	27	37	195	195	317	317	22	80	30	-	-	76	76	202	35	85	3	18,8	26,6
RC 270-DA/SR	F14	-	170x110	36	64	145	300	145	510	40	130	30	-	-	110	110	248	60	100	4	32,0	45,0
RC 280-DA/SR	F12	F16	234,7x97,2	46		300		510											130	5	42,0	68,0

HC 1 = Inner hole circle
HC 2 = Outer hole circle
HC 3 = Extra hole pattern
U* = Guide ring for other hole circle on request
Y** = Tolerance H9. The hole is octagonal and adapts to valve stems with squares both in 90° (ISO 5711) and 45° (DIN 3337) direction

RC 200 drawings are available in pdf, AutoCAD and 3D-format on our homepage
www.remotecontrol.se/download

Measures in mm.

Dimensions Hole circles

HC	Hole circle Ø	Thread	Depth
F05	50	M6	11
F07	70	M8	14
F10	102	M10	17
F12	125	M12	21
F14	140	M16	25
F16	160	M20	32
170 x 110	-	M16	25
234,7 x 97,2	254		

Rotork Sweden AB
Tel +46 (0)23 587 00
Fax +46 (0)23 587 45
www.remotecontrol.se
falun.info@rotork.com



RC-M1 Manual override unit

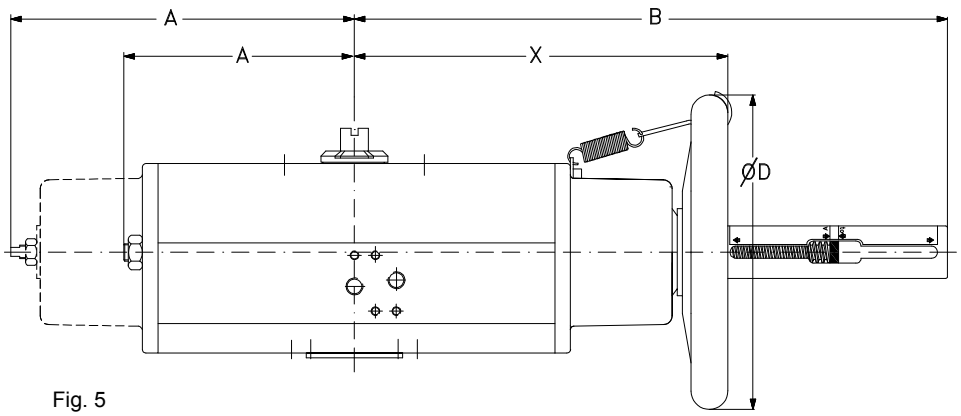

Fig. 5
Integrated manual override RC-M1

Measures in mm.

Dimensions

Actuator with Integrated manual override RC-M1	Length A DA	Length A SR	Length B	Length X	Wheel Ø D	Weight kg DA-M	Weight kg SR-M
RC210-DA/SR	45	45	295	145	180	2,3	2,5
RC220-DA/SR	98	150	295	145	180	2,7	3,2
RC230-DA/SR	65	65	345	190	180	4,8	5,3
RC240-DA/SR	135	200	345	190	180	5,8	7,1
RC250-DA/SR	90	90	505	295	320	13,8	15,2
RC260-DA/SR	190	285	505	295	320	16,3	20,2
RC265-DA/SR	195	317	600	370	320	24,3	31
RC270-DA/SR	145	145	812	515	400	47	57,7
RC280-DA/SR	300	510	812	490	600	55,1	80,7

Rotork Sweden AB
Tel +46 (0)23 587 00
Fax +46 (0)23 587 45
www.remotecontrol.se
falun.info@rotork.com

Free air at 6 bar air pressure

RC200-DA - Air consumption

Type	Anti-clockwise rotation, dm^3	Clockwise rotation, dm^3
RC210-DA	0,6	1,1
RC220-DA	1,1	1,3
RC230-DA	2,2	4
RC240-DA	4,4	5
RC250-DA	6,9	13
RC260-DA	13,8	16
RC265-DA	32	36
RC270-DA	33	54
RC280-DA	66	67

6 bar air pressure

RC200-DA - Operation time

Type	Anti-clockwise and clockwise rotation, sec.
RC210-DA	<0,3
RC220-DA	<0,3
RC230-DA	<0,6
RC240-DA	<0,7
RC250-DA	<2,5
RC260-DA	<2,5
RC265-DA	<1,5
RC270-DA	<5
RC280-DA	<5

Free air at 6 bar air pressure

RC200-SR - Air consumption

Type	dm^3
RC210-SR	1,1
RC220-SR	1,3
RC230-SR	4
RC240-SR	5
RC250-SR	13
RC260-SR	16
RC265-SR	36
RC270-SR	54
RC280-SR	67

6 bar air pressure

RC200-SR - Operation time

Type	Anti-clockwise and clockwise rotation, sec.
RC210-SR	<0,3
RC220-SR	<0,3
RC230-SR	<0,6
RC240-SR	<0,7
RC250-SR	<2,5
RC260-SR	<2,5
RC265-SR	<1,5
RC270-SR	<5
RC280-SR	<5

.The times relate to full air flow and may increase depending on solenoid valves and the dimensions of connecting pipes.

Pneumatic actuators RC 200-DA Double acting

Torque Nm

RC200-DA - Double acting actuators

Type	Function	Position 0°=closed 90°=open	Air pressure supply							
			2,1 bar 30 psi	2,8 bar 40 psi	3,5 bar 50 psi	4,2 bar 60 psi	4,5 bar 65 psi	5,5 bar 80 psi	6 bar 87 psi	7 bar 100 psi
RC 210-DA	Air opens	0°	13	17	21	25	27	35	38	44
	Air closes	60°	6	8	10	12	13	17	19	22
		90°	9	12	15	18	19	25	27	32
RC 220-DA	Air opens	0°	26	34	42	51	55	70	76	88
	Air closes	60°	13	17	21	25	27	35	38	44
		90°	18	24	30	36	39	50	54	63
RC 230-DA	Air opens	0°	48	64	80	96	103	133	145	165
	Air closes	60°	24	31	39	47	50	66	72	83
		90°	35	46	57	69	74	96	105	120
RC 240-DA	Air opens	0°	98	130	162	195	209	266	290	340
	Air closes	60°	49	65	81	97	104	133	145	170
		90°	70	93	117	140	150	193	210	240
RC 250-DA	Air opens	0°	150	200	250	300	321	413	450	530
	Air closes	60°	75	100	125	150	161	206	225	260
		90°	108	143	179	215	230	293	320	380
RC 260-DA	Air opens	0°	305	407	508	610	654	834	910	1070
	Air closes	60°	150	200	250	300	321	422	460	530
		90°	220	293	367	440	471	596	650	770
RC 265-DA	Air opens	0°	432	576	720	864	926	1188	1296	1512
	Air closes	60°	203	271	338	406	435	556	606	711
		90°	307	409	512	614	658	844	921	1075
RC 270-DA	Air opens	0°	630	840	1050	1260	1350	1733	1890	2200
	Air closes	60°	315	420	525	630	675	862	940	1100
		90°	455	607	758	910	975	1247	1360	1590
RC 280-DA	Air opens	0°	1270	1693	2117	2540	2721	3483	3800	4450
	Air closes	60°	635	847	1058	1270	1361	1742	1900	2220
		90°	915	1220	1525	1830	1961	2512	2740	3190

Rotork Sweden AB
Tel +46 (0)23 587 00
Fax +46 (0)23 587 45
www.remotecontrol.se
falun.info@rotork.com

Pneumatic actuators RC 200-SR Spring closes

Springs adapted to air pressure supply

Torque Nm

RC200-SR - Single acting - Spring closes

Typ	Funktion	Position 0°=closed 90°=open	Springs adapted to air pressure supply							
			2,1 bar 30 psi	2,8 bar 40 psi	3,5 bar 50 psi	4,2 bar 60 psi	4,5 bar 65 psi	5,5 bar 80 psi	6 bar 87 psi	7 bar 100 psi
RC 210-SR	Air opens	0°	7	9	12	14	15	19	20	24
		60°	3	4	5	6	6	8	9	10
		90°	4	5	6	7,5	8	10	11	13
	Spring closes	90°	6	8	10	12	13	16	18	21
		30°	3	4	5	6	6	8	9	10
		0°	4	6	7	8,5	9	11	12	14
RC 220-SR	Air opens	0°	15	19	24	29	31	39	41	48
		60°	6	8	10	12	13	16	18	21
		90°	8	10	12	15	16	20	22	26
	Spring closes	90°	13	17	21	25	27	33	37	43
		30°	6	8	10	12	13	16	18	21
		0°	9	11	14	17	18	23	25	29
RC 230-SR	Air opens	0°	27	36	45	54	58	72	78	92
		60°	12	15	19	23	25	31	33	39
		90°	15	19	24	29	31	39	41	48
	Spring closes	90°	24	31	39	47	51	63	69	81
		30°	12	15	19	23	25	31	33	39
		0°	17	22	27	33	36	44	47	55
RC 240-SR	Air opens	0°	55	73	92	110	119	147	158	185
		60°	24	31	39	47	51	63	68	80
		90°	29	39	48	58	63	77	84	98
	Spring closes	90°	48	64	80	96	104	128	140	163
		30°	24	31	39	47	51	63	68	80
		0°	33	44	55	66	71	88	96	115
RC 250-SR	Air opens	0°	85	113	142	170	184	227	245	290
		60°	37	49	62	74	80	99	105	125
		90°	45	60	75	90	97	120	130	155
	Spring closes	90°	75	100	125	150	162	200	215	255
		30°	37	49	62	74	80	99	105	125
		0°	50	67	83	100	108	133	150	175
RC 260-SR	Air opens	0°	173	230	287	345	374	460	500	580
		60°	75	100	125	150	162	200	215	250
		90°	90	120	150	180	195	240	265	310
	Spring closes	90°	153	203	254	305	330	407	440	515
		30°	75	100	125	150	162	200	215	250
		0°	105	140	175	210	227	280	305	350
RC 265-SR	Air opens	0°	280	373	467	560	607	671	730	935
		60°	113	150	187	225	244	280	305	360
		90°	125	167	208	250	271	303	330	425
	Spring closes	90°	210	280	350	420	455	560	610	695
		30°	103	137	171	205	222	273	330	355
		0°	153	203	254	305	330	407	440	525
RC 270-SR	Air opens	0°	355	473	592	710	769	947	1030	1210
		60°	155	207	258	310	336	413	440	520
		90°	190	253	317	380	412	507	550	640
	Spring closes	90°	315	420	525	630	682	840	910	1060
		30°	155	207	258	310	336	413	440	520
		0°	215	287	358	430	466	573	620	720
RC 280-SR	Air opens	0°	715	953	1192	1430	1549	1907	2080	2430
		60°	310	413	517	620	672	827	900	1050
		90°	380	507	633	760	823	1013	1110	1290
	Spring closes	90°	635	847	1058	1270	1376	1693	1840	2150
		30°	310	413	517	620	672	827	900	1050
		0°	435	580	725	870	942	1160	1260	1470

Rotork Sweden AB
Tel +46 (0)23 587 00
Fax +46 (0)23 587 45
www.remotecontrol.se
falun.info@rotork.com

Pneumatic actuators RC 200-SR Spring opens

Springs adapted to air pressure supply

Torque Nm

RC200-SRF - Single acting - Spring opens

Type	Funktion	Position 0°=closed 90°=open	Springs adapted to air pressure supply							
			2,1 bar 30 psi	2,8 bar 40 psi	3,5 bar 50 psi	4,2 bar 60 psi	4,5 bar 65 psi	5,5 bar 80 psi	6 bar 87 psi	7 bar 100 psi
RC 210-SRF	Spring opens	0°	7	9,6	12	15	16	20	21	25
		60°	2,6	3,6	4,6	5,5	6	7,5	7,8	9
		90°	3	4,3	5,5	6,6	7	9	10	11,5
	Air closes	90°	5,2	7,2	9	11	12	15	16,2	19
		45°	2,8	3,8	4,9	6	6,4	8	9	10,1
		0°	4,5	6,2	8	10	10	13	14,3	17,2
RC 220-SRF	Spring opens	0°	14	20	25	30	33	41	43	50
		60°	5,3	7,2	9	11	12	15	15,5	18
		90°	6,7	9	12	14	15	19	20	23
	Air closes	90°	11	14	18	22	24	30	33	38
		45°	5,6	7,7	9,8	12	13	16	18	21,5
		0°	9,4	13	16	20	22	27	30	34,5
RC 230-SRF	Spring opens	0°	27	37	47	57	62	77	84	93
		60°	9,8	13	17	21	23	28	30	33
		90°	12	16	21	25	27	34	38	40
	Air closes	90°	21	29	37	44	48	60	62	75
		45°	11	15	19	23	25	31	33	41
		0°	17	23	29	36	39	48	51,5	66
RC 240-SRF	Spring opens	0°	56	77	98	118	130	160	180	190
		60°	20	27	35	42	46	57	65	68
		90°	25	34	43	52	56	70	80	82
	Air closes	90°	42	58	73	89	97	120	123	155
		45°	22	31	39	47	52	64	66	84
		0°	35	48	61	74	81	100	97	135
RC 250-SRF	Spring opens	0°	84	115	145	175	195	240	265	305
		60°	30	42	53	64	70	87	96	112
		90°	37	50	64	78	85	105	120	130
	Air closes	90°	65	89	110	135	150	185	195	225
		45°	34	47	60	73	79	98	104	123
		0°	54	74	95	115	125	155	160	195
RC 260-SRF	Spring opens	0°	175	240	300	370	400	500	540	620
		60°	63	86	110	135	145	180	195	220
		90°	77	105	135	160	175	220	245	280
	Air closes	90°	135	185	230	280	310	385	400	465
		45°	70	96	120	150	330	200	210	250
		0°	110	150	190	230	520	315	330	395
RC 265-SRF	Spring opens	0°	251	335	419	500	536	670	730	850
		60°	92	123	154	175	188	230	260	300
		90°	113	150	188	225	241	300	325	375
	Air closes	90°	188	250	313	375	402	500	525	620
		45°	101	135	169	200	214	260	290	335
		0°	158	210	263	315	338	400	445	525
RC 270-SRF	Spring opens	0°	350	480	620	750	810	1010	1100	1250
		60°	130	175	220	270	290	365	400	450
		90°	155	210	270	320	350	440	480	550
	Air closes	90°	270	370	470	570	620	770	830	1000
		45°	145	195	250	300	330	410	430	540
		0°	230	310	390	480	520	645	680	810
RC 280-SRF	Spring opens	0°	730	1000	1270	1540	1670	2080	2250	2500
		60°	260	360	460	550	600	750	780	820
		90°	320	440	560	680	740	920	1000	1100
	Air closes	90°	560	770	980	1180	1290	1600	1700	2000
		45°	290	400	510	620	670	835	900	1100
		0°	460	630	805	980	1060	1320	1380	1700

Rotork Sweden AB
Tel +46 (0)23 587 00
Fax +46 (0)23 587 45
www.remotecontrol.se
falun.info@rotork.com

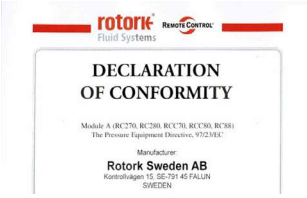

CE-marking according to the Pressure Equipment Directive PED 97/23/EC



Environment Control ISO 14001:2004



Quality Assurance ISO 9001:2000

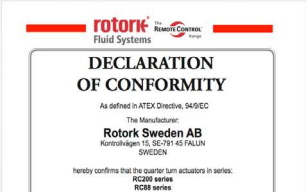

CE-marking according to the ATEX Directive 94/9/EC

RCT

Cylinder and spring housing are hard anodised and PTFE sealed for optimum corrosion resistance. A good alternative to steel or stainless steel. Good for use in corrosive environments such as offshore and petrochemicals.





RC200

Available epoxy-painted to NORSOK Offshore standards or other customer specifications.



RC Twin Power
Multi-turn Pneumatic/Hydraulic Actuator
Up to 800 Nm
7,080 lbf. in.



RCC
Pneumatic Steel Actuator
Up to 900 Nm
7,965 lbf. in.



RCEL
Electric Actuator
Up to 2,450 Nm
21,680 lbf. in.

Rotork Sweden AB
Box 80
Kontrollvägen 15
SE-791 22 Falun
Sweden
Tel +46 (0)23 587 00
Fax +46 (0)23 587 45
www.remotecontrol.se
falun.info@rotork.com

We reserve the right to make changes without notice